Roll-top Desk • Cherry Desk Organizer • Fretwork Picture Frame • Extension Wing Router Table

Woodsmith®

Vol. 18 / No. 103

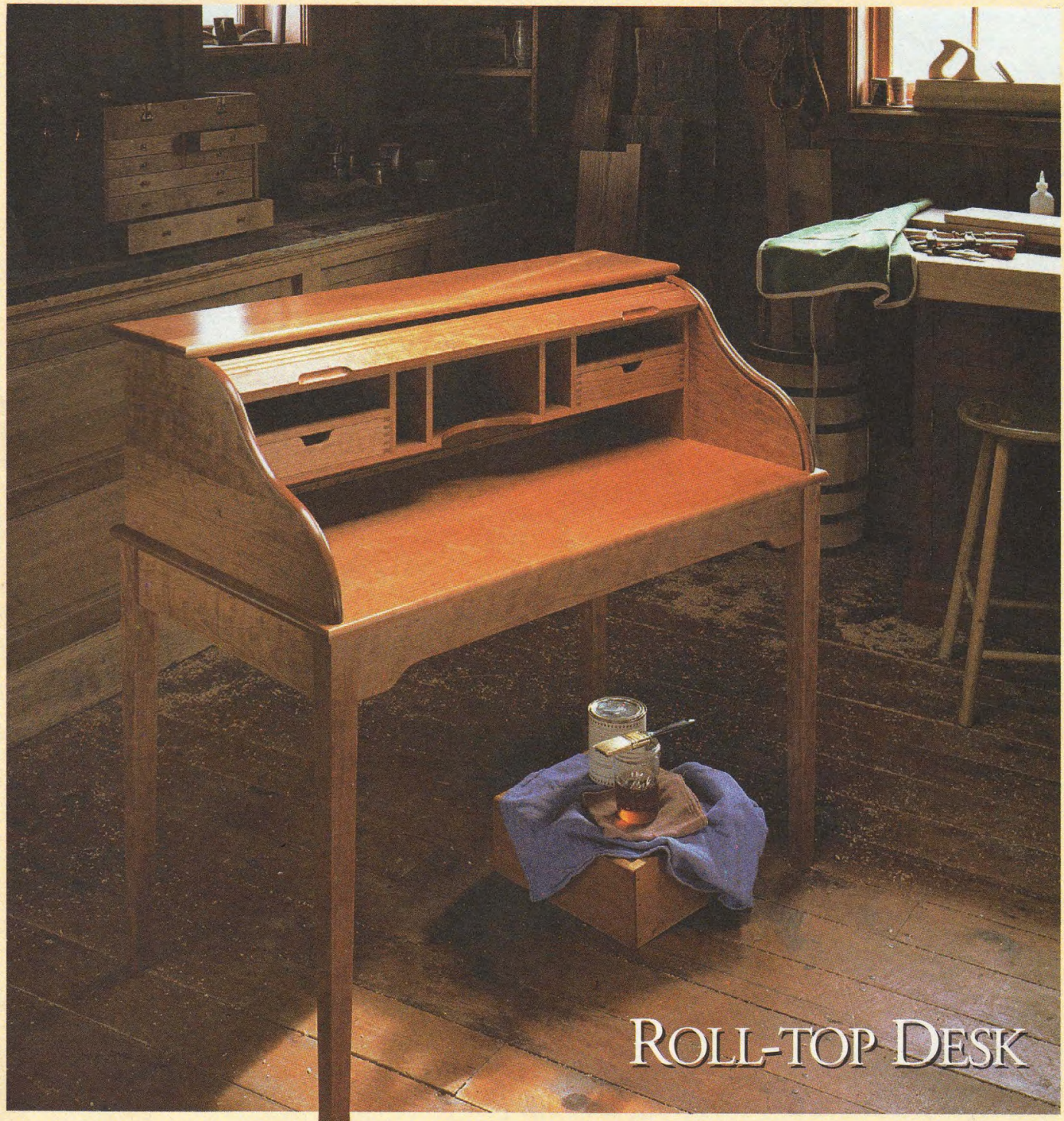

Woodsmith

No. 103 February, 1996

Publisher Donald B. Peschke
Editor Terry J. Strohman
Associate Editors Jon Garbison, Mark Williams
Art Director Todd Lambirth
Senior Illustrators David Kreyling, Dirk Ver Steeg
Illustrator Erich Lage

CREATIVE RESOURCES

Creative Director: Ted Kralicek • *Executive Editor:* Douglas L. Hicks • *Assistant Editor:* Vincent S. Ancona • *Project Design Director:* Ken Munkel • *Senior Project Designer:* Kent Welsh • *Shop Manager:* Steve Curtis • *Shop Craftsman:* Steve Johnson • *Senior Photographer:* Crayola England • *Electronic Publishing:* Douglas M. Lidster • *Electronic Comunication Coordinator:* Gordon C. Gaippe • *Associate Graphic Design Director:* Susie Rider • *Senior Graphic Designer:* Chris Glowacki • *Graphic Designer:* Cheryl L. Cynor

CIRCULATION

Circulation Director: Susan Du Bois • *Assistant Circulation Director:* Troy J. Dowell • *Subscription Managers:* Sandy Baum, Paige Rogers • *Assistant Subscription Manager:* Julie Greenlee • *Newsstand Manager:* Kent A. Buckton

CORPORATE SERVICES

Vice President of Planning and Finance: Jon Macarthy • *Controller:* Robin Hutchinson *Sr. Account.:* Laura Thomas • *Bookkeeping:* Holly Lucas • *Production Dir.:* George Chmielarz • *Production Mgr.:* Carol Quijano • *Pro. Dev. Dir.:* Joyce Moore • *Network Administrator:* Nick Thielen • *Admin. Assistants:* Cheryl A. Scott, Julia Fish • *Receptionist:* Jeanne Johnson • *Building Maintenance:* Ken Griffith

WOODSMITH MAIL ORDER

Operations Director: Bob Baker • *Art Dir.:* Cindy Scarpino • *Materials Manager:* Mark Mattiussi • *Customer Service Mgr.:* Jennie Enos • *Warehouse Supr.:* Nancy Johnson • *Buyer:* Linda Jones • *Systems Operator:* Tammy Aldini • *Team Leader:* Karla Cronin • *Tech. Support:* Dave Stone • *Cust. Serv. Reps.:* Jennifer Murphy, Joy Krause, Sara Kono, Anna Cox, Adam Best, Kristi Andrews, Margo Petrus • *Warehouse:* Gloria Sheehan, Chuck Carlson, Sylvia Carey, Larry Prine, Scott Gilliam, Cathy Steiner

WOODSMITH STORE

Manager: Dave Larson • *Assistant Manager:* Paul Schneider • *Sales Staff:* Wendell Stone, Pat Lowry • *Office Manager:* Vicki Edwards

Woodsmith® (ISSN 0164-4114) is published bimonthly (Feb., Apr., June, Aug., Oct., Dec.) by August Home Publishing Company, 2200 Grand, Des Moines, IA 50312.

Woodsmith® is a registered trademark of August Home Publishing. **Copyright©** 1996 August Home Publishing Company. All rights reserved.

Subscriptions: Single copy: $4.99. One year subscription (6 issues), $19.95. Two years (12 issues), $35.95. (Canada/Foreign add $5 per year, U.S. funds.)
Second Class Postage Paid at Des Moines, IA and at additional offices.
Postmaster: Send change of address to *Woodsmith*, Box 10718, Des Moines, IA 50350.
Subscription Questions? Call 1-800-333-5075, 8:00 am to 5:00 pm, Central Time, weekdays.
E-Mail: Prodigy: EDJE97A, Compuserve: 75330,2301, America Online: August Home, Internet: augusthome@aol.com, World Wide Web: http://augusthome.com.

Printed in U.S.A.

EDITOR'S COLUMN

SAWDUST

Over the years it seems that February has become a month for improvements here at *Woodsmith*. In February 1989 we changed our graphic presentation. And in February 1990 we increased the number of pages.

Well, in keeping with that tradition, we've decided to make some changes starting with this, the February 1996 issue of *Woodsmith*.

As I said before, it has been seven years since we've done a major overhaul to the graphic presentation (the look and arrangement of art and text). And while we have often made gradual and subtle changes, we all felt that it was time for something new.

NEW LOOK. We spent a lot of time discussing what changes to make and why. After all, I didn't want to fix anything that wasn't broken. What I really wanted to do was make some refinements. Our goal was to give *Woodsmith* a fresh look and make it easier to read and use.

To make *Woodsmith* easier to read, we basically made three changes. First, the page color has changed. I've always felt the buff-colored page was easy on the eyes. But we decided to make it a bit lighter, which makes the text even more readable. Next, we increased the size of the type. And finally we put a little more space between the lines to make them less crowded.

Besides making *Woodsmith* more readable, we also wanted it to be easier to use. To do that, we've made a number of changes to headlines, typefaces, and page layout. But the changes you'll probably find most noticeable have to do with the illustrations and photos.

To make the artwork stand out more, most of the illustrations now have a white background. And we made the box numbers more prominent, so you can locate them quicker when working on a project.

Another big change has to do with photos. Basically, you'll be seeing larger photos and more of them.

MORE PAGES. For the last six years *Woodsmith* has been a 32 page magazine. But that's changing too — we're adding four more pages.

Of course this means that we'll be able to present you with more information and projects. But we did more than just increase the number of pages. We also increased the quality of the paper as well. Now we're using an extra heavy-weight paper to print the front and back cover. This means that *Woodsmith* should stand up even better to being used in your shop.

NAME CHANGE. The only other change here at *Woodsmith* is Don is now the publisher (a role he has been moving towards for some time), and I've picked up the responsibilities of editor. And while the name at the bottom of this page has changed, I assure you that *Woodsmith* will continue to bring you the high quality woodworking projects and step-by-step instructions that you've come to expect.

As you can tell, I'm very excited about all this. But I'd like to hear from you. So drop me a line and tell me what you think. I always enjoy hearing from other woodworkers.

Terry

A LOOK INSIDE

CONTENTS

Features

Roll-top Desk 6

Classic shape. Simple design. Both come together to make this roll-top desk a rewarding project that's easy to build.

Desk Organizer 14

Slide this desk organizer into the roll-top desk. Or build it as a separate unit that looks good from any angle. Either way, it helps organize all your writing materials.

Building Tambours 20

Understanding how a tambour door works takes the mystery out of building one. By using a few basic designs and changing the profile of the slats, you can build a tambour door to fit most any application.

Fretwork Picture Frame 24

The intricate fretwork on this picture frame is only half the story. It's hinged to another frame that holds a standard 3x5 photograph. This freestanding frame makes a great weekend project.

Scroll Saw Techniques 26

There's a trick or two to using a scroll saw to cut fretwork panels. We show you the best blades to use and how to reduce chipout so you don't spend a lot of time cleaning up the panel after it's cut out.

Extension Wing Router Table 28

This router table replaces the extension wing on your table saw. Besides saving space, there's a unique fence system that attaches to the existing rip fence on your saw. It features a built-in storage compartment for router bits and a dust collection hook-up.

Departments

Tips & Techniques 4

Shop Notes 18

Reader's Jig 34

Sources 35

Roll-top Desk *page 6*

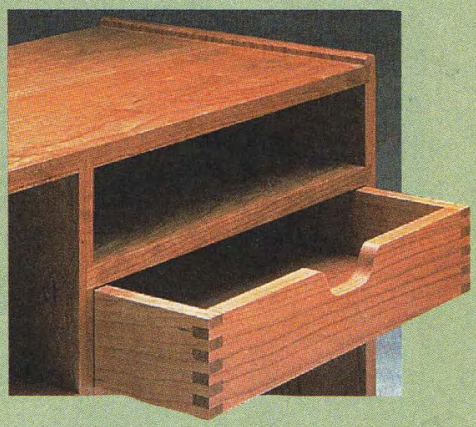

Desk Organizer *page 14*

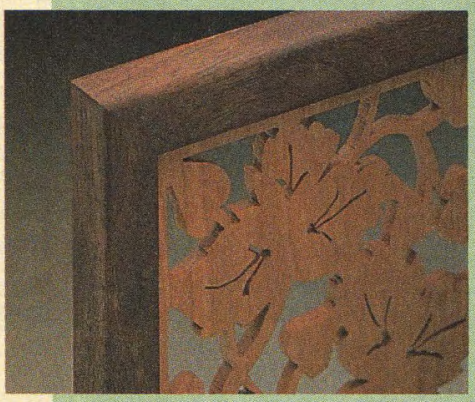

Picture Frame *page 24*

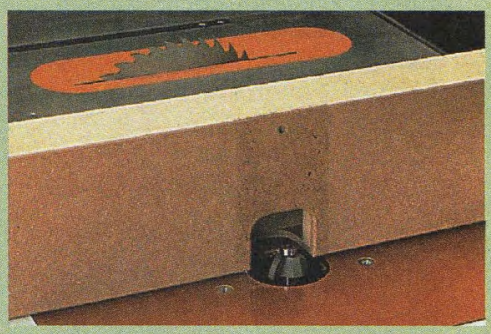

Router Table *page 28*

TIPS & TECHNIQUES

Rip Fence Adjustment

The rip fence on my contractor-type table saw was always frustrating to use. It never lined up square with the blade after it was locked down in place.

To correct this problem, I added a pair of adjustment screws to the head of the rip fence, see Fig. 1. They let me "fine tune" the fence position. By turning either the right or left screw, the fence swings a little in the same direction until it's perfectly aligned and parallel with the blade, see Fig. 2.

Adding the screws is simple. Just drill and tap two holes in the head of the rip fence, see Fig. 1a. When a screw is installed, it contacts the table rail and moves the fence a little with each turn of the screw. Tightening a lock nut on the screw keeps the screw from moving once you have the fence set where you want it, see Fig. 2a.

Walt Neu
Naples, Idaho

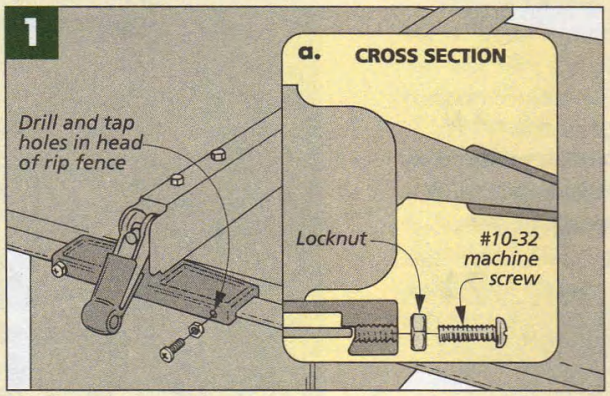

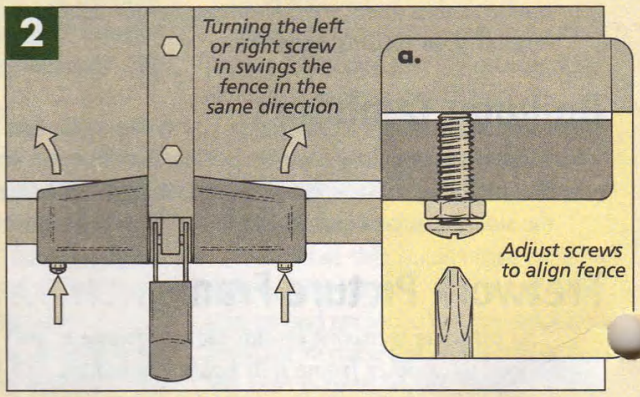

Studded Knob

Adding studded knobs to a jig makes it easier to use. But longer lengths aren't available so I make my own with a regular plastic knob, a carriage bolt, and a couple nuts, see drawing.

Just thread both nuts on the carriage bolt, screw on the knob, and lock it in place with one nut. Now cut off the head of the carriage bolt and remove the second nut to clean up the threads at the end.

Larry Heinonen
Union City, Michigan

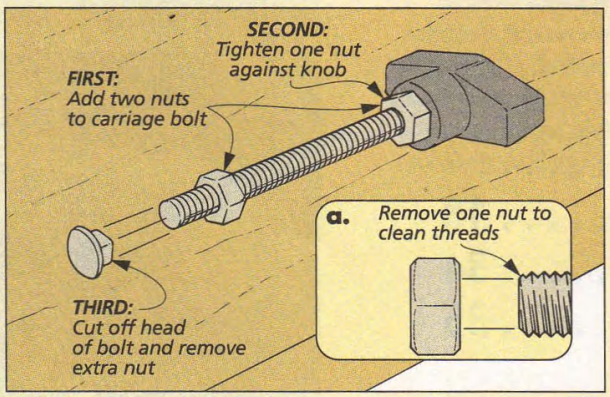

Sanding Station

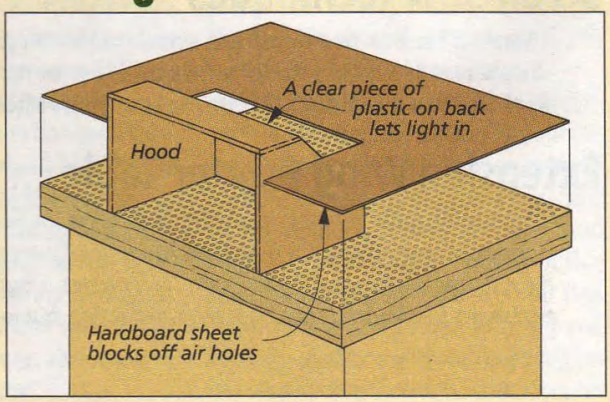

A large sanding table, with a few modifications, is the perfect place to carve and sand small parts. I simply add a small "sanding hood" that sits on top of the table. It concentrates the airflow to one small area.

This hood is nothing more than a few pieces of plywood glued together, see drawing above. And I used a clear piece of plastic for the back to let in light.

But the secret to increasing airflow is covering the rest of the table top with a piece of hardboard. This blocks off the other air holes so the dust and chips are drawn in through the sanding hood.

Ben Meller
Whitewater, Wisconsin

Biscuit Fasteners

Here's another use for wooden biscuits. They can be used to make fasteners that hold a top securely in place and still allow the wood to move. All you need are a biscuit joiner, a piece of stock, and some wood-screws, see Fig. 1.

Start by cutting evenly spaced slots in a board. Next, cut the board into small blocks. Finally, drill an oversize shank hole in each of the blocks and glue a biscuit in the slot.

Now cut a series of slots in the aprons or rails of your project, see Fig. 2. The biscuits in the blocks fit in these slots when screwed to the top.

Michael Niziol
Cortland, New York

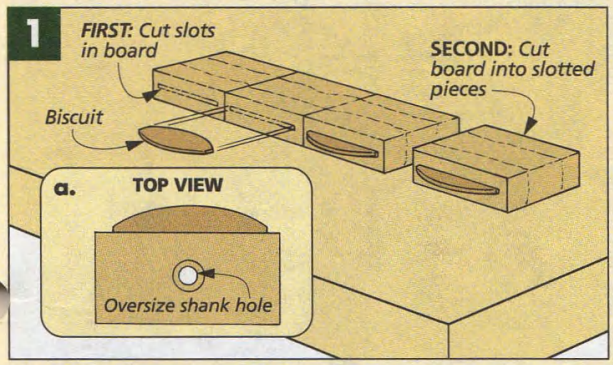

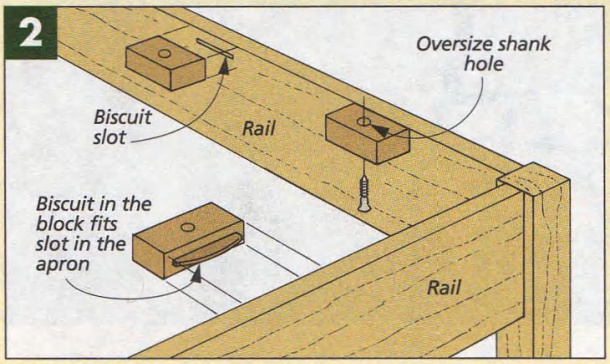

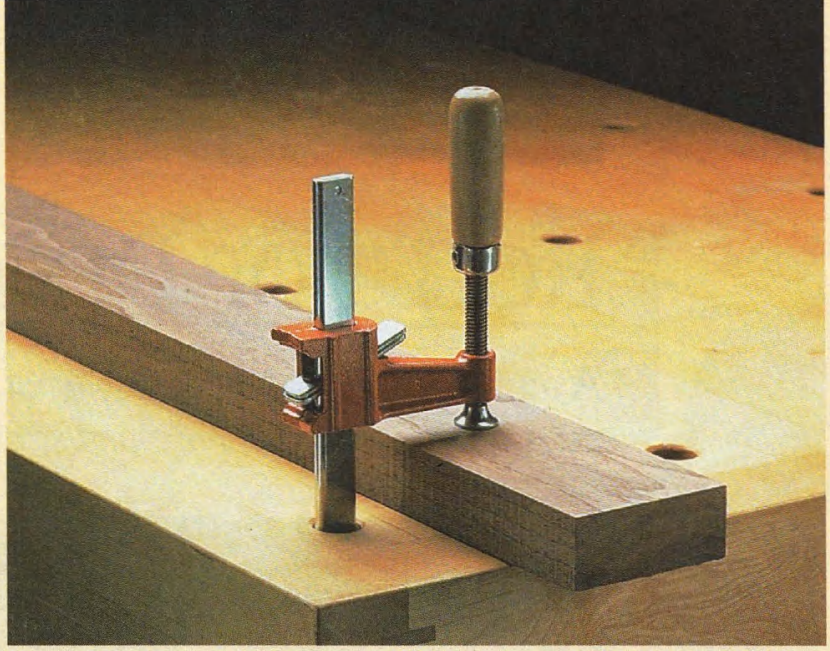

Bench Holdfast

Sometimes, the only way to clamp a project to a work bench is with a bench hold-fast. But you don't need to go out and buy one if you make a small alteration to a regular bar clamp.

Just remove the fixed jaw by drilling out the rivet that holds it to the clamp bar, see Fig. 1. Then install a small metal strip with a machine screw and nut, see Fig. 2. Note: Crimp the threads of the screw at the end to help "lock" the nut in place, see Fig. 2a.

Now swivel the metal strip to fit through a dog hole in the bench and swivel it back to hold the clamp, see Figs. 3 and 3a.

Michael Marinello
Tempe, Arizona

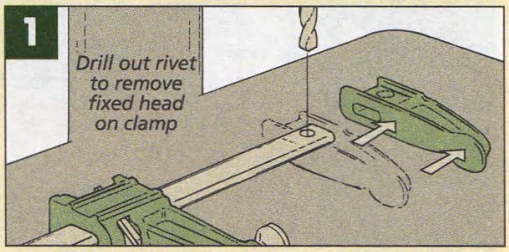

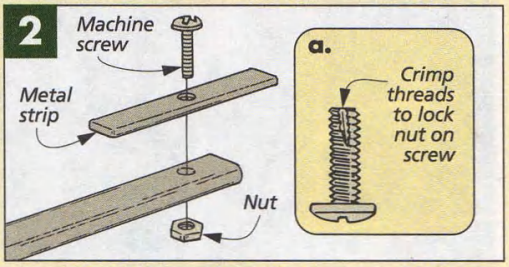

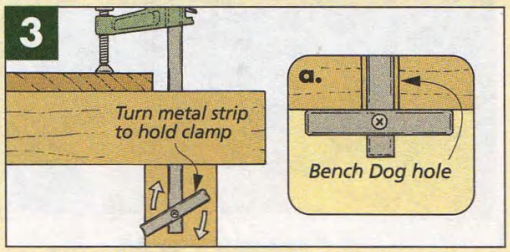

Dovetail Cauls

Clamping cauls help pull dovetail joints together. But cutting out the face of each caul to fit around the pins or tails takes a lot of time.

Rather than cut out the cauls, I hot-glue small, hardboard pads to the face instead, see drawing. The pads fit around the tails and can be removed easily to fit different-size dovetails.

Walt Neu
Naples, Idaho

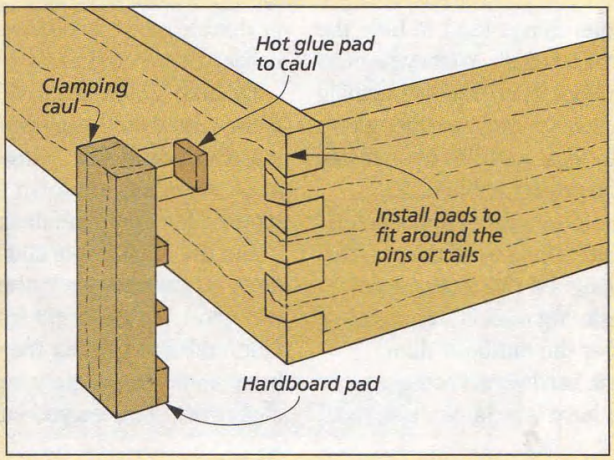

SUBMIT YOUR TIPS

If you would like to share an *original* shop-tested tip, send it to: *Woodsmith*, Tips and Techniques, 2200 Grand Avenue, Des Moines, Iowa 50312. Or if it's easier, FAX it to us at: 515-282-6741. Or use our E-Mail: 75330,2301@compuserve.com.

If published, you'll receive $30 to $150, depending on the published length. Include a brief explanation and sketch or photo. We'll rewrite the tip and redraw the art, if needed. Also, *please* list a daytime phone number.

FEATURE PROJECT

ROLL-TOP DESK

A tambour door is only part of what makes this desk special. It also features a simple, classic shape and straightforward construction.

Sometimes the more obvious things tend to hide the important ones. Take this roll-top desk. Your eye is automatically drawn to the tambour door. There's just something about a door that opens and closes without swinging on a hinge. But you really need to look past the door to see what makes this desk a special project to build.

For one thing, there's the desk organizer hidden behind the door. Normally, an organizer is built as an integral part of the desk. But this one is designed as a totally separate project that can fit on *any* desk. Yet once it's completed, it slides easily into place under the tambour door.

Another example is the desk hardware. Or more accurately, the lack of it. What you have is a classic "s-shaped" or double curved roll-top desk which requires virtually no hardware (just a few woodscrews).

Or take a look at the design features. Sure the decorative cutout on the bottom edge of the front rail is appealing. But at the same time, it provides additional clearance when sitting down to write at the desk. And the tapered legs give the desk a light, graceful appearance.

But the most important feature of making this roll-top desk is how easy everything went together. I credit this to a good design. Right from the start, when cutting the tapered legs to gluing the slats to the canvas for the tambour door, the straightforward construction went like clockwork. I guess you can't ask for anything more.

Construction Details

Overall Dimensions:
42½"x 43"x 24"

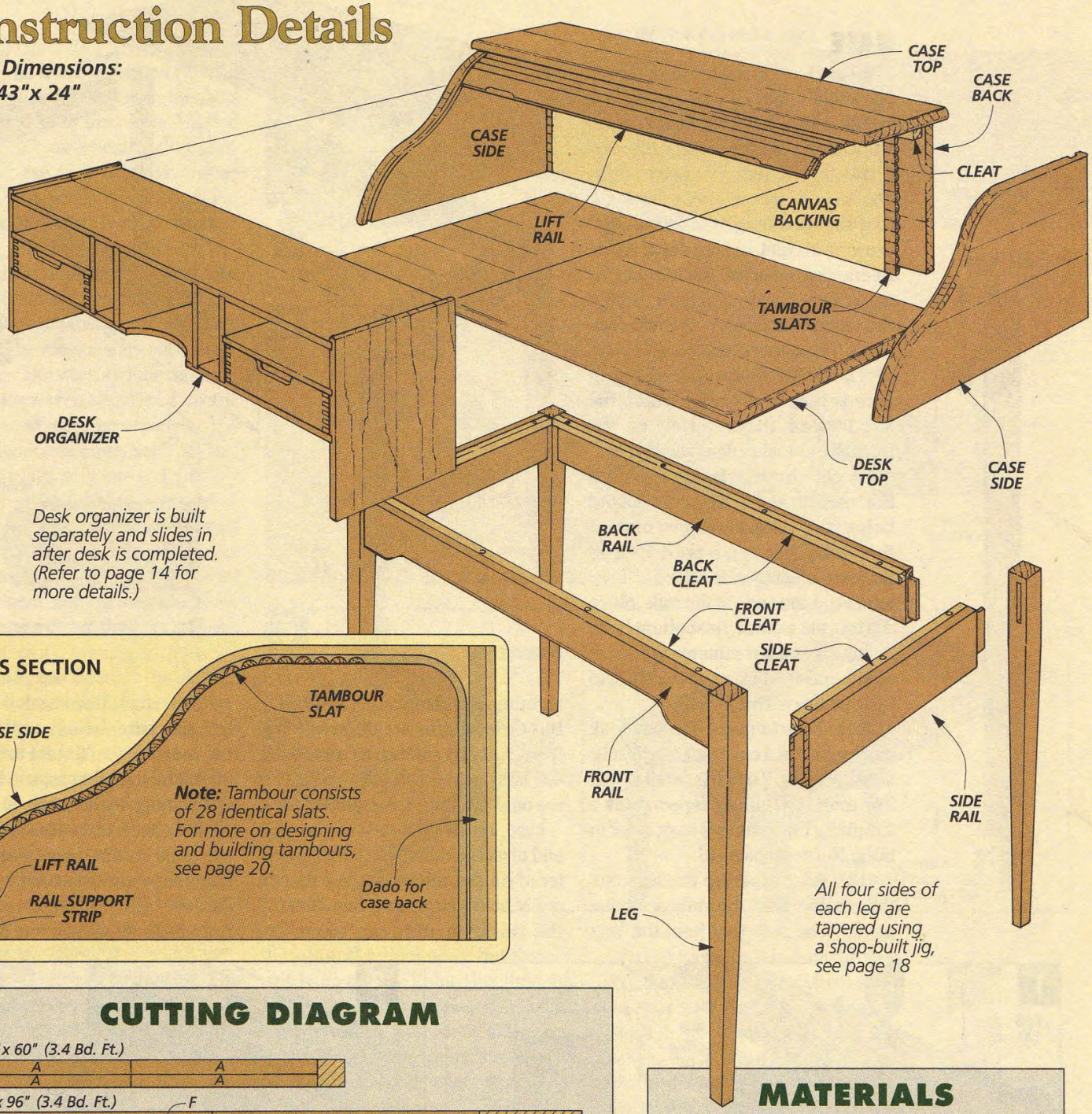

Desk organizer is built separately and slides in after desk is completed. (Refer to page 14 for more details.)

All four sides of each leg are tapered using a shop-built jig, see page 18

CROSS SECTION

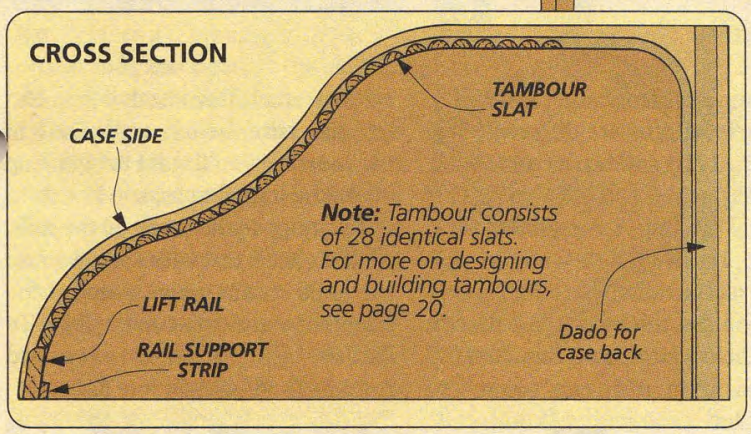

Note: *Tambour consists of 28 identical slats. For more on designing and building tambours, see page 20.*

CUTTING DIAGRAM

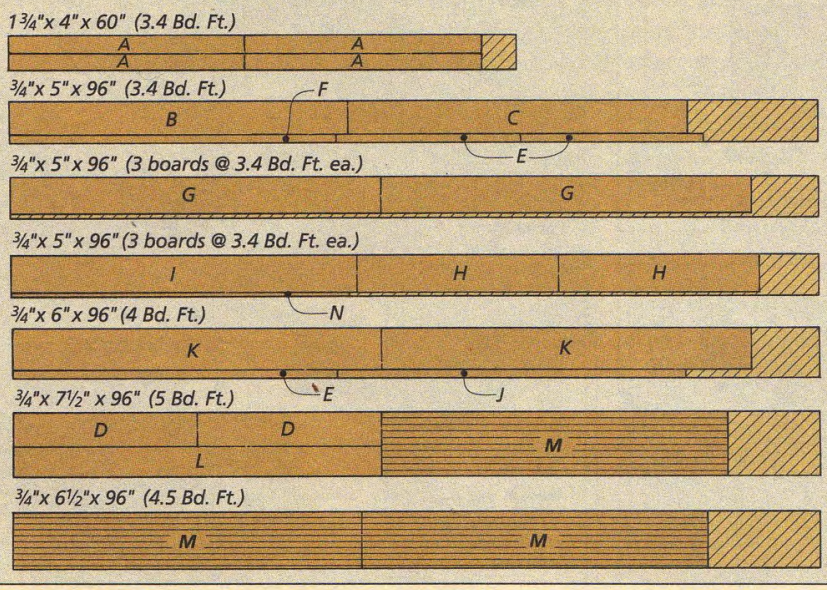

MATERIALS

A	Legs (4)	1¾ x 1¾ - 27¼
B	Front Rail (1)	¾ x 4 - 40
C	Back Rail (1)	¾ x 4 - 40
D	Side Rails (2)	¾ x 4 - 21
E	Frt./Bk. Cleats (2)	¾ x ¾ - 38½
F	Side Cleats (2)	¾ x ¾ - 19½
G	Desk Top (1)	¾ x 24 - 43
H	Case Sides (2)	¾ x 12 - 23
I	Case Back (1)	¾ x 12 - 40½
J	Cleat (1)	¾ x ¾ - 40
K	Case Top (1)	¾ x 9½ - 43
L	Lift Rail (1)	½ x 1¾ - 40½
M	Tambour Slats (28)	5/16 x ¾ - 40½
N	Rail Support Strip (1)	¼ x ½ - 40

BASE

The base for this roll-top desk is built like a simple table. There are four legs and a top joined by some rails. I started work on the base by making the legs.

LEGS. These **legs (A)** start out as $1^3/_4$"-square pieces of 8/4 stock cut to a finished length of $27^1/_4$", see drawing at right and leg detail at left. At one end, I marked the location for a pair of $^1/_4$"-wide mortises to hold the tenons cut later on the rails, see Fig. 1. These mortises are cut on adjacent faces. But what's a little different here is they aren't centered on the leg. Instead, they're offset by $^1/_2$" from the outside edge, see Fig. 1a.

To cut the mortises, I used a Forstner bit and drilled overlapping holes $^{13}/_{16}$"-deep to remove most of the waste. This depth provides a little extra clearance for the $^3/_4$"-long tenons on the ends of the rails. Since the bit cuts a clean, flat-bottom hole, it only takes a few minutes to square up the ends and clean up the sides of the mortise with a chisel.

TAPER. Now to make the legs look more graceful, I cut a taper on all four sides, see Fig. 2 and leg detail at left. For more on cutting tapers, plus a simple jig that makes it easy, refer to Shop Notes on page 18.

RAILS. After tapering the legs, set them aside until the rails are completed. The rails that hold the legs together are identical in width (4"). But their lengths are different. The **front rail (B)** and **back rail (C)** are 40" long, while the **side rails (D)** are only 21" long, see exploded view.

Next, I cut a $^3/_4$"-long tenon on each end of all the rails. This tenon is centered on the thickness, but there's really no trick to doing this. Just flip the rail over between passes to remove stock from both sides. But to make sure the tenon fits snug in the mortise, you'll want to sneak up on the final thickness, see Fig. 3.

To complete the tenon on the rails, all that's left is to create a shoulder on the ends so the tenon matches the length of the mortise in the legs. To do that, $^1/_2$" of the tenon is removed from both edges, see Fig. 3a.

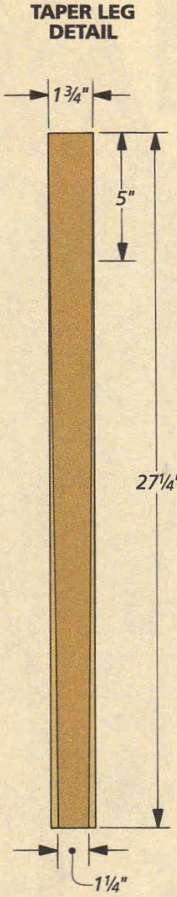

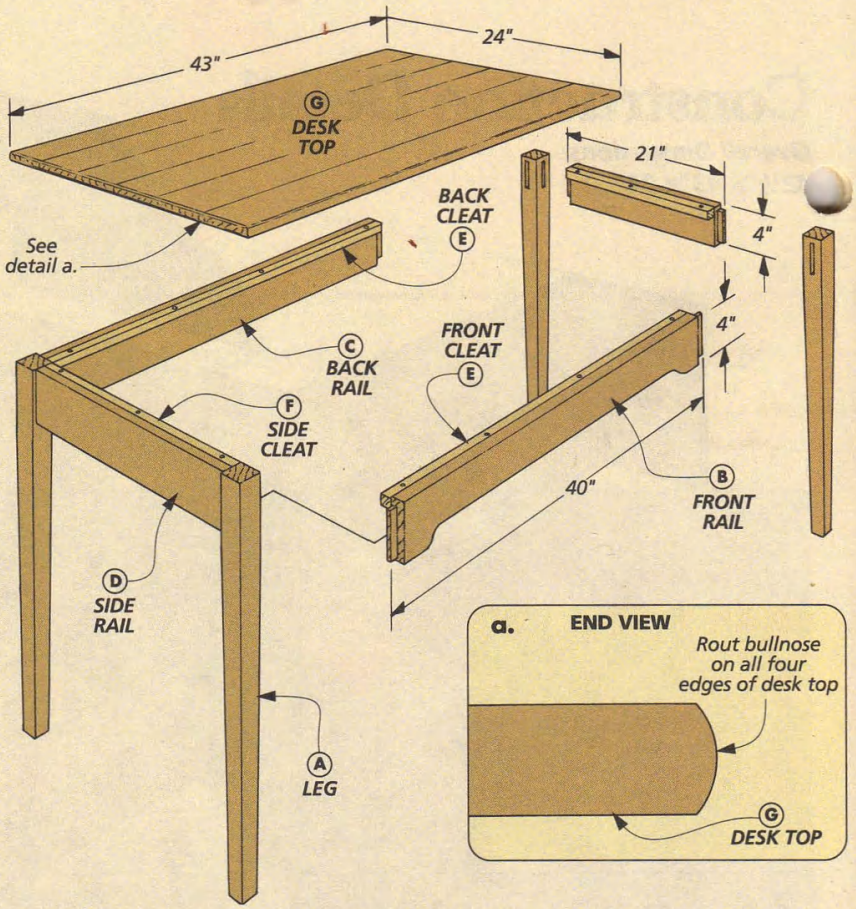

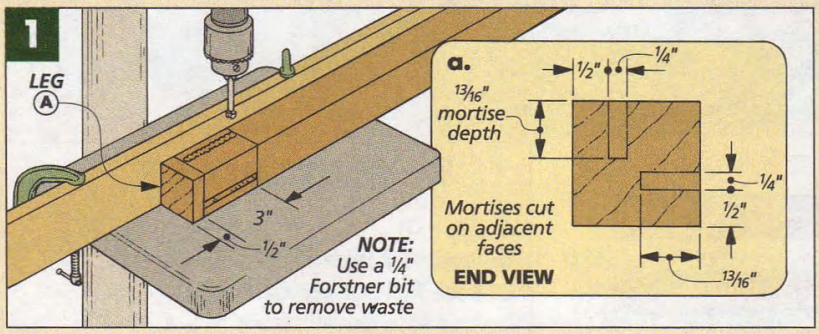

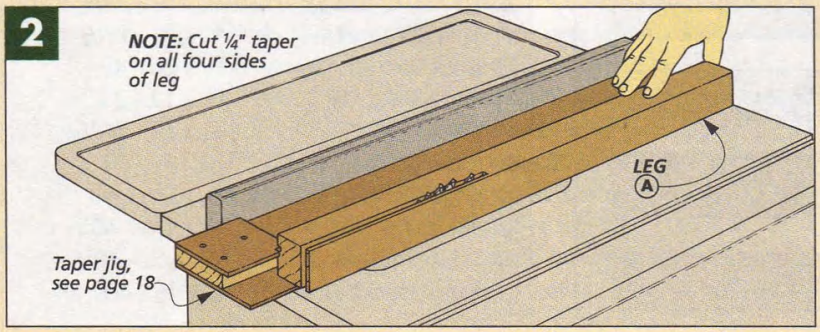

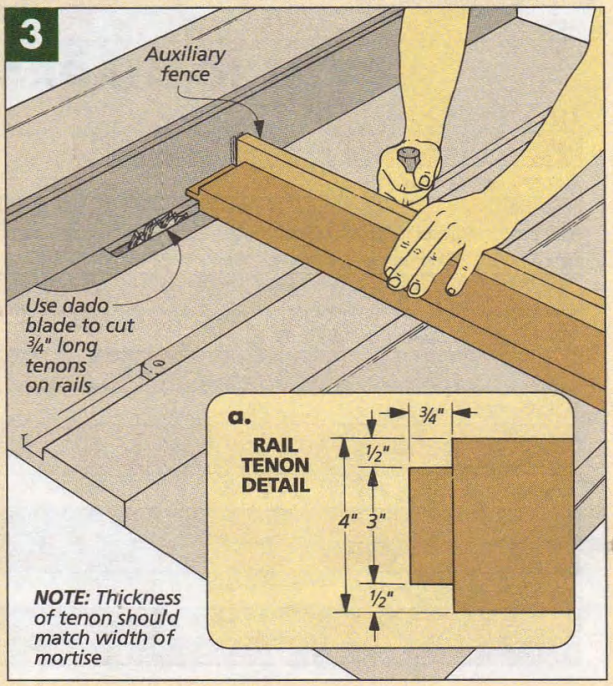

BASE

The base for this roll-top desk is built like a simple table. There are four legs and a top joined by some rails. I started work on the base by making the legs.

LEGS. These **legs (A)** start out as $1\frac{3}{4}$"-square pieces of 8/4 stock cut to a finished length of $27\frac{1}{4}$", see drawing at right and leg detail at left. At one end, I marked the location for a pair of $\frac{1}{4}$"-wide mortises to hold the tenons cut later on the rails, see Fig. 1. These mortises are cut on adjacent faces. But what's a little different here is they aren't centered on the leg. Instead, they're offset by $\frac{1}{2}$" from the outside edge, see Fig. 1a.

To cut the mortises, I used a Forstner bit and drilled overlapping holes $\frac{13}{16}$"-deep to remove most of the waste. This depth provides a little extra clearance for the $\frac{3}{4}$"-long tenons on the ends of the rails. Since the bit cuts a clean, flat-bottom hole, it only takes a few minutes to square up the ends and clean up the sides of the mortise with a chisel.

TAPER. Now to make the legs look more graceful, I cut a taper on all four sides, see Fig. 2 and leg detail at left. For more on cutting tapers, plus a simple jig that makes it easy, refer to Shop Notes on page 18.

RAILS. After tapering the legs, set them aside until the rails are completed. The rails that hold the legs together are identical in width (4"). But their lengths are different. The **front rail (B)** and **back rail (C)** are 40" long, while the **side rails (D)** are only 21" long, see exploded view.

Next, I cut a $\frac{3}{4}$"-long tenon on each end of all the rails. This tenon is centered on the thickness, but there's really no trick to doing this. Just flip the rail over between passes to remove stock from both sides. But to make sure the tenon fits snug in the mortise, you'll want to sneak up on the final thickness, see Fig. 3.

To complete the tenon on the rails, all that's left is to create a shoulder on the ends so the tenon matches the length of the mortise in the legs. To do that, $\frac{1}{2}$" of the tenon is removed from both edges, see Fig. 3a.

DECORATIVE CUTOUT. Up to this point

DECORATIVE CUTOUT DETAIL

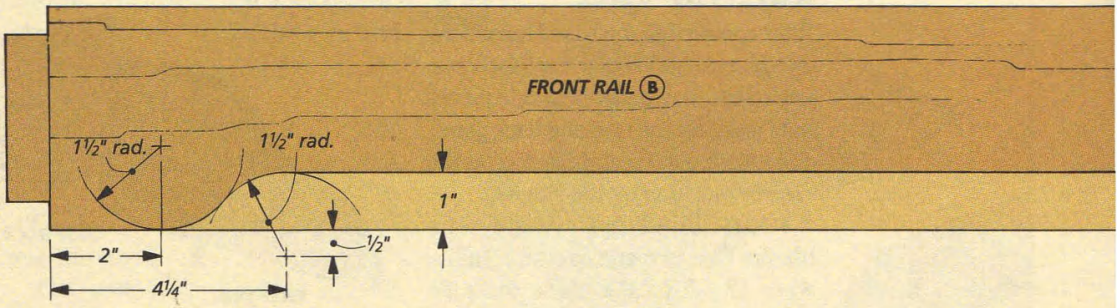

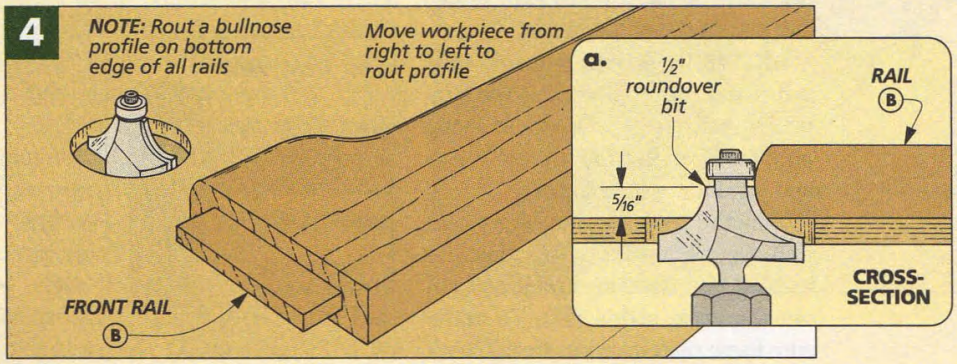

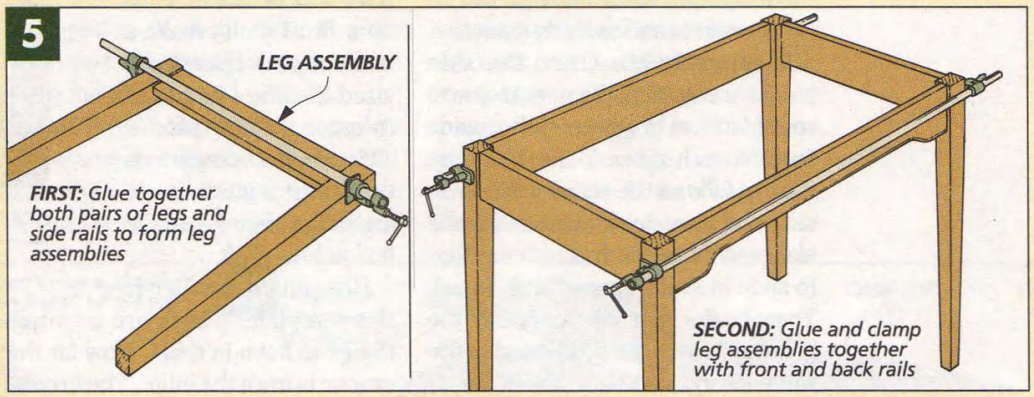

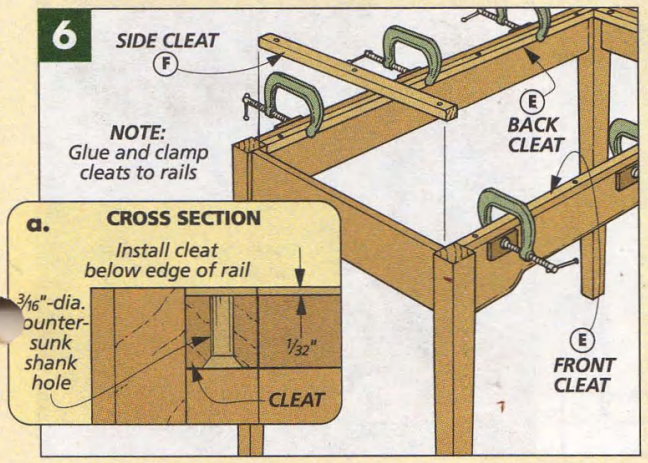

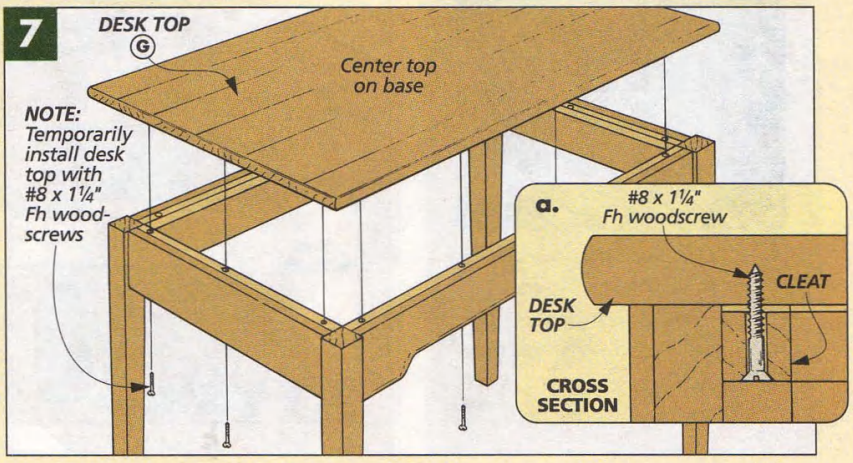

ROLL-TOP CASE

After completing the base I turned my attention to building the roll-top case. It consists of two identical side pieces held together by a top and back panel, see drawing at right. I started on the case by working on the sides.

BLANKS. The sides are glued-up blanks that are cut oversize (mine were $12\frac{1}{2}$" x 24"). Once the glue dries, the "s-shape" for the side pieces can be drawn on the blank.

SIDE TEMPLATE. An easy way to do this is by making a template first, see template detail at right. Draw the shape on a piece of hardboard, cut it out, and sand the edges smooth.

Now the template can be used to transfer the profile to the glued-up blanks. Just trace around it and cut out the **case sides (H)**. To make sure these pieces are identical, I stuck them together with double-sided carpet tape and sanded them smooth.

GROOVE TEMPLATE. Once the side pieces are sanded, the next step is to rout identical grooves on the inside face of each piece. This $\frac{1}{4}$"-deep groove follows the shape of the case side and provides a channel for the slats and lift rail of the tambour door to slide in as it's opened and closed. To make the door slide smoothly, the grooves have to be positioned in the same location on both pieces.

So I used a template again, but this time to guide my router. It guarantees that the grooves will be positioned in the same location. But I didn't make a new template, I just downsized the one I had used to make the side pieces. This smaller template is used with a guide bushing in the router. See the box at lower left.

How much smaller is this template? There are a couple things to keep in mind. How far the groove is from the edge. The groove width. And the distance from the edge of the router bit to the outer edge of the guide bushing. In my case, this ended up at $\frac{7}{8}$".

Now use a compass set at $\frac{7}{8}$" and follow the existing shape of the template along the front edge and across the top, see Fig. 8. But the back edge is a little unusual.

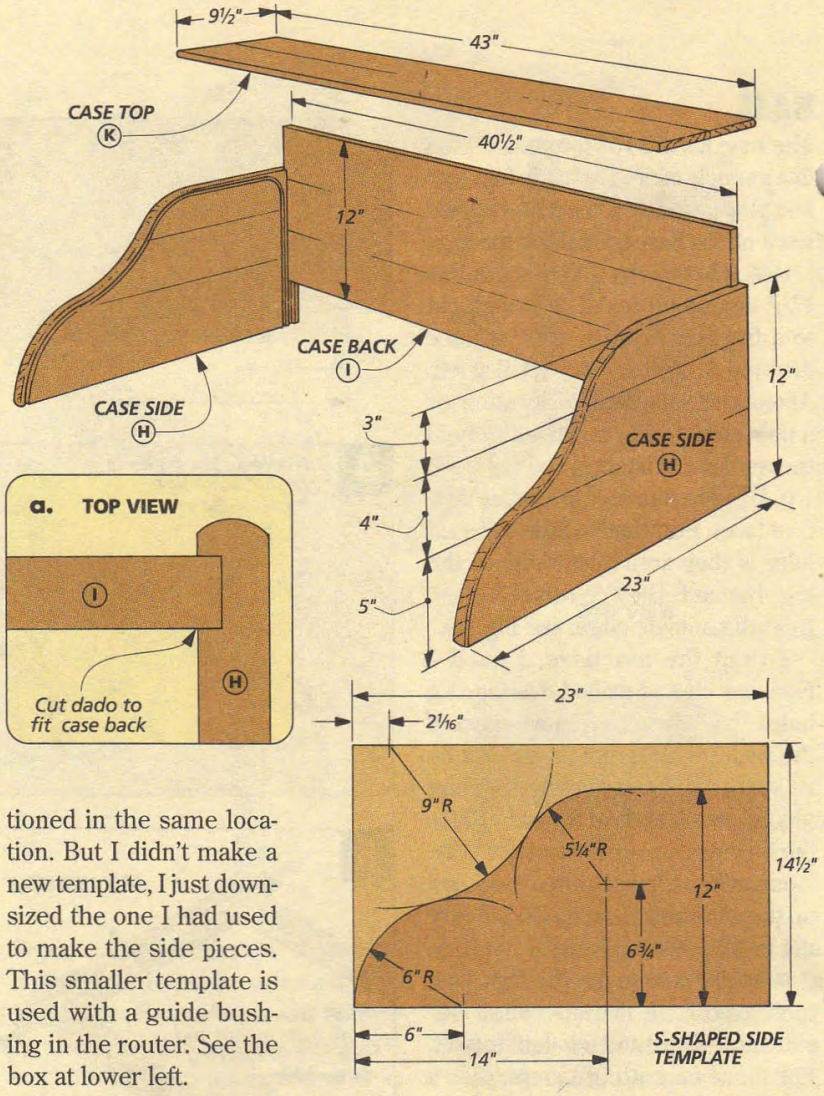

GUIDE BUSHING

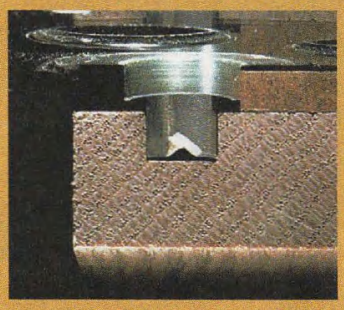

▲ *A guide bushing installed in the router base rides against the template when routing the groove. Hold the bushing tight against the template for an exact copy of the profile.*

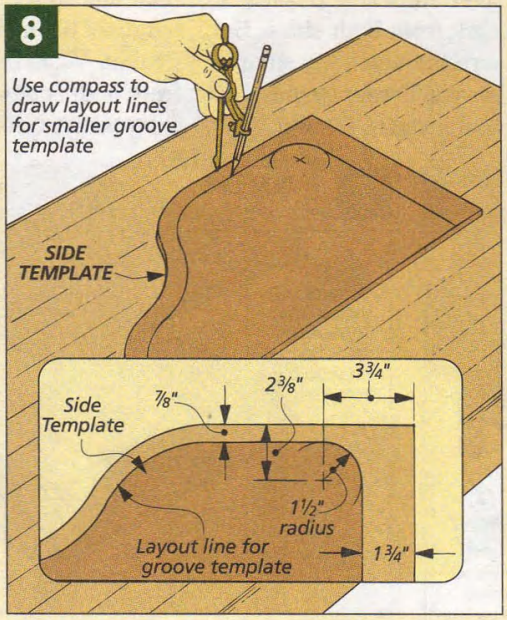

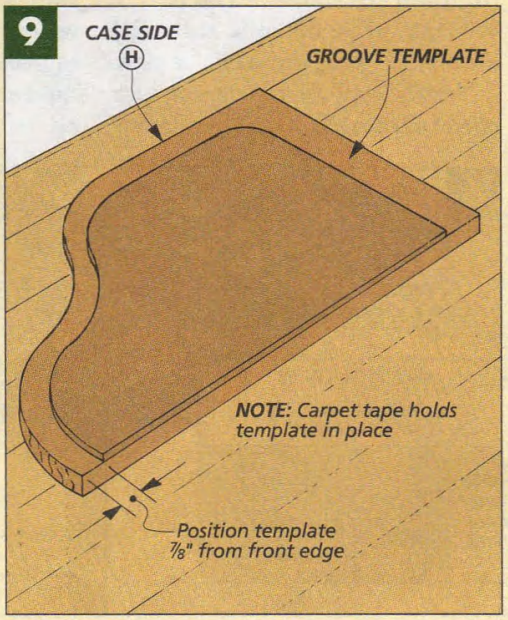

Here you need a $1\frac{1}{2}$" radius so the door can slide around the corner. And for clearance between the door and case back, the distance changes to $1\frac{3}{4}$", see Fig. 8a. Once the lines are drawn, cut the template to size and sand the edges smooth.

ROUTING GROOVE. After making the template, it's a breeze to use it. Just position the front edge $\frac{7}{8}$" back from the front edge of the side and flush along the bottom, see Fig. 9.

To make sure the template doesn't move, I used several strips of double-sided carpet tape to hold it securely in place. Shop Note: While you're at it, it's also a good idea to add a backing board where the bit exits the groove, see Fig. 10. This keeps the edge of the board from chipping out.

I used a hand-held router and made two passes to reach the $\frac{1}{4}$"-depth. You could do it in one pass. But a light cut makes it easier to keep the bushing tight against the template.

BULLNOSE. After routing the grooves, I switched to the router table to rout a bullnose profile on all the edges except the top. I didn't want a radius here so the case top would sit nice and flat. To do that, just measure out about 9" from the back edge and make a mark where you want to stop the profile, see Fig. 11.

BACK DADO. To complete the side pieces, a dado is cut along the back edge to hold the case back, see Fig. 12. This $\frac{1}{4}$"-deep dado is cut to match the thickness of the back panel.

CASE BACK. With the dado cut, the **case back (I)** is added next to join the sides. This glued-up panel matches the height of the sides (12") and is glued in the dado, see Fig. 13.

But before the glue dries, it's important to check that the sides are perpendicular to the back. If not, the tambour door may "rack" in the opening once it's installed.

CLEAT. One more thing to add to the case before moving on to the case top is a **cleat (J)**, see Fig. 13. It fits between the sides and is glued and clamped to the back. Just like the cleat on the base, it isn't glued flush with the top edge, see Fig. 13a.

CASE TOP. All that's left to complete the case is building the **case top (K)**. Like the side and back pieces it's also a solid wood panel with a bullnose profile routed on all the edges.

The top is attached to the case with screws and glue. The screws secure the back edge, see Fig. 13a. But the front edge is glued in place in just a couple spots, see Fig. 13b. If you glued the whole edge, it would prevent the solid top from moving when the humidity changes.

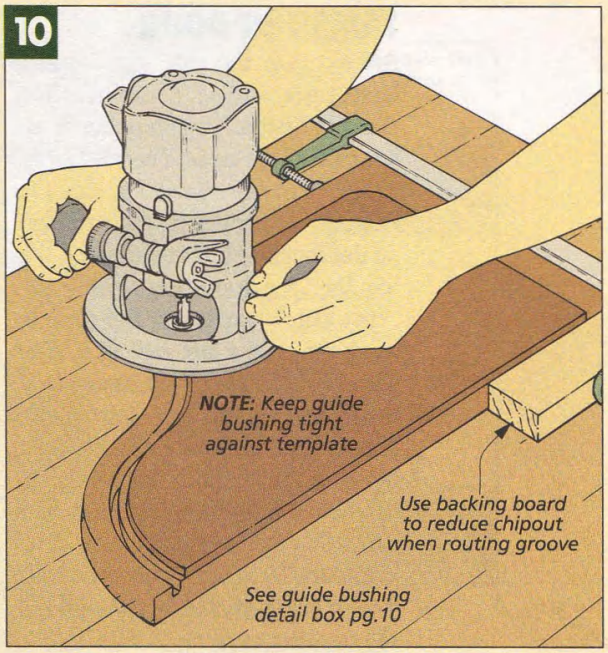

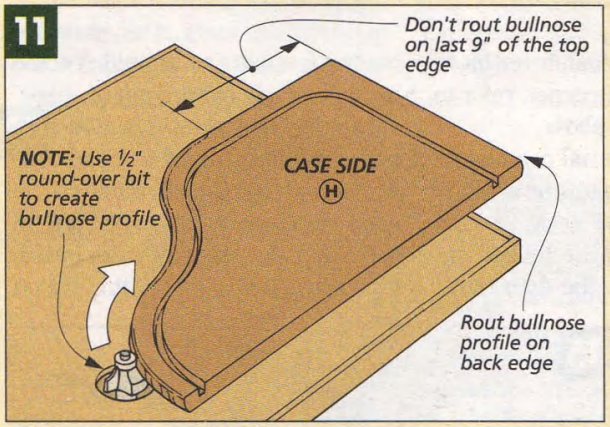

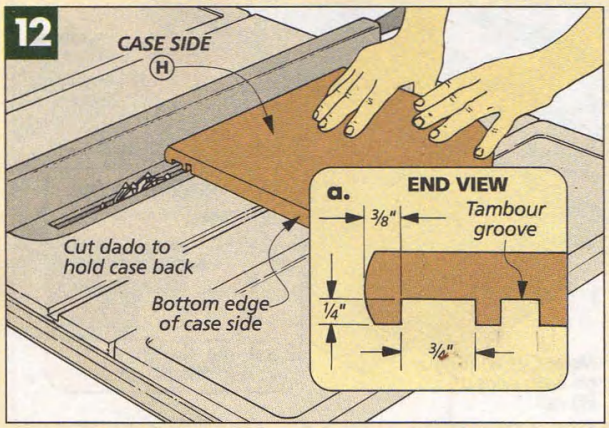

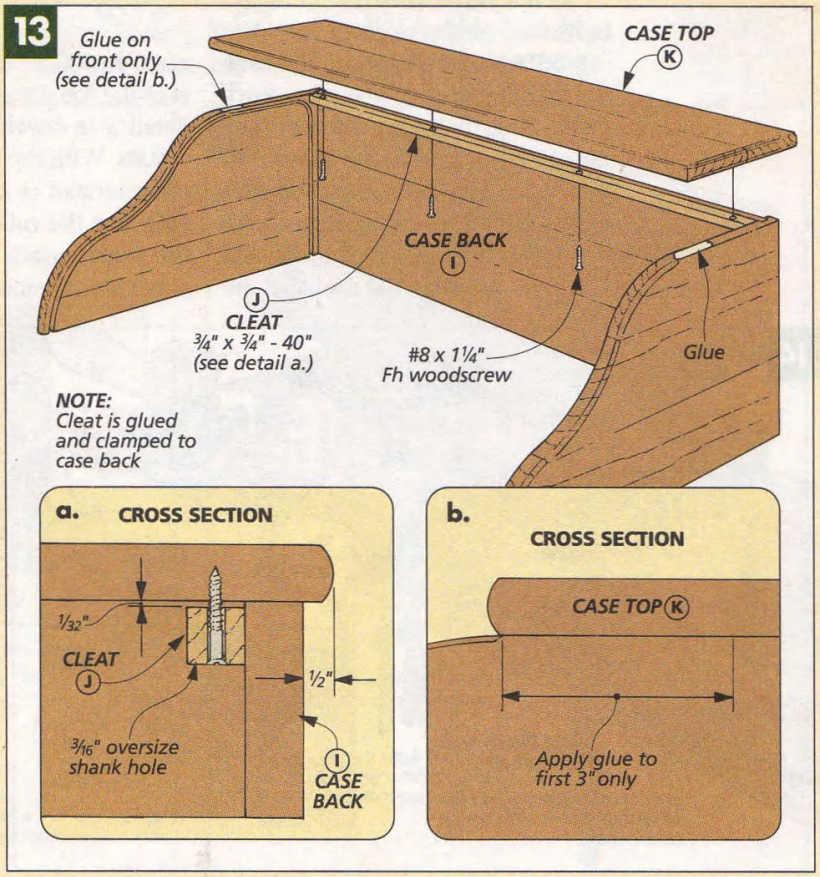

TAMBOUR DOOR

After putting the case together, the next step is building the tambour door that fits inside. Tambour doors are basically all the same. There's a lift rail to open and close the door, slats that make up the body, and a fabric "hinge" on the backside that holds everything together, see drawing at right.

LIFT RAIL. I started on the door by working on the **lift rail (L)**. It's a wide piece (3") of 1/2"-thick stock cut to finished length. To determine the length, just measure the distance between the tambour grooves in the case sides and subtract 1/8" for clearance. (My rail was 40 1/2" long.)

CUTOUTS. Next, a pair of cutouts are routed in the front face of the lift rail, see drawing at right.

Just draw a couple lines on the front face to mark the location for the cutouts, see Fig. 14. Then use a hand-held router and a cove bit to create each recess, see Fig. 14a. Note: A wide piece of stock helps to keep the router steady during the cut.

BEVEL. Next, I ripped a 7° bevel on the bottom edge of the lift rail so it would sit flush on the desk top, see detail 'a' at right. Then rip the lift rail to its final width (1 3/4").

RABBET & ROUNDOVER. Now to complete the lift rail there's a little more work to do. First, the ends need to be thinner so they'll slide in the grooves in the case sides. This was taken care of by rabbetting both ends to create a 1/4" x 1/4" tongue, see Figs. 15 and 15a. Also, to match the profile of the slats, I used a 3/8" roundover bit to rout the top outside corner, refer to detail 'a' in drawing above.

SLATS. With the lift rail complete, I concentrated on the **tambour slats (M)**. For the roll-top desk, 28 slats the same length as the lift rail are needed to complete the door. But I made a few extra so I wouldn't come up short if any twisted out of shape.

Making the slats is a two-step process. First, I used a round-over bit to create a rounded profile on the edge of the workpiece, see Figs. 16 and 16a. Then using a carrier board, it's quick and easy to rip a thin slat off

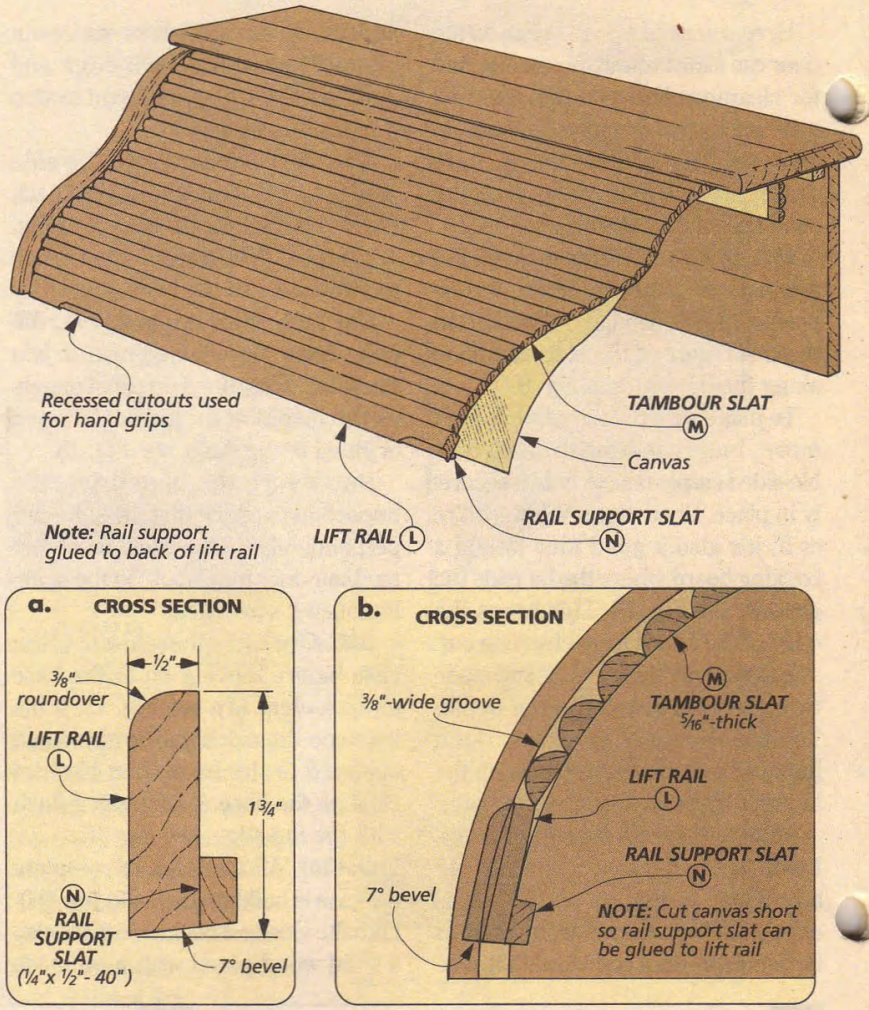

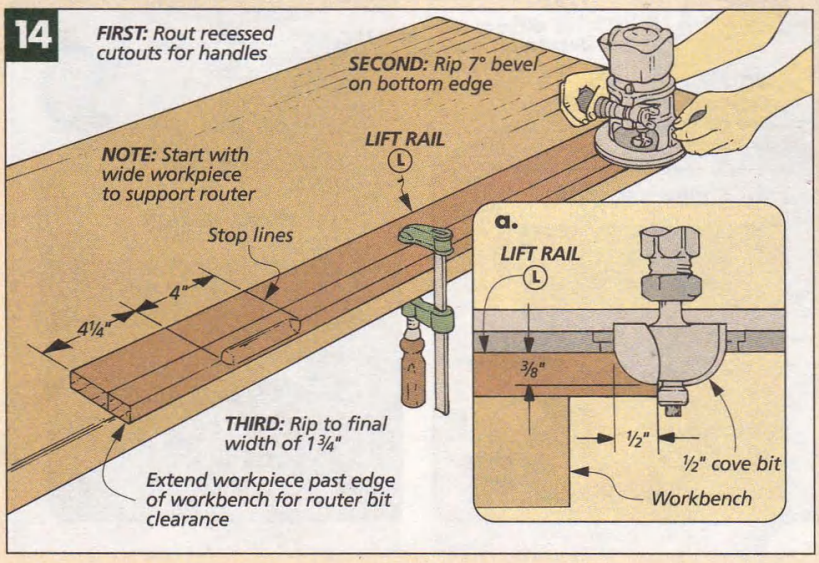

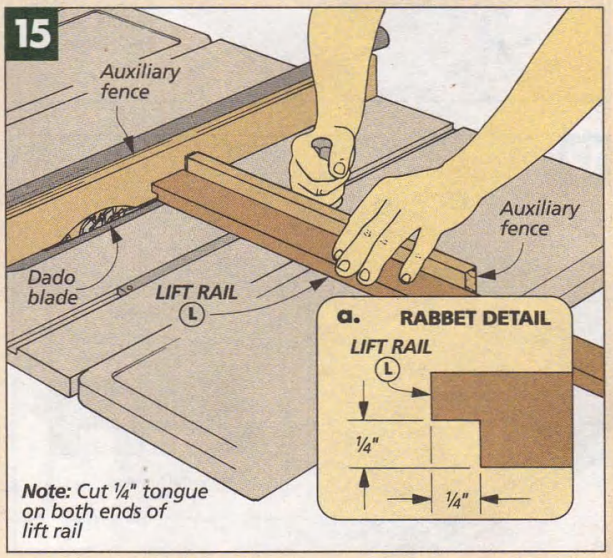

the edge, see Figs. 17 and 17a.

By adjusting the rip fence to clear the 5/16" notch on the end of the carrier board, all the slats will end up a uniform 5/16" thickness. A uniform thickness is important so the door slides freely in the groove. For more on cutting slats, refer to page 20.

GLUE-UP. Once you have your slats cut, both the lift rail and slats can be glued to a canvas backing. Here again, refer to page 20 for gluing slats.

DRY ASSEMBLY. After the slats are glued to the canvas, it's a good time to check the fit of the door. I wanted to see if it slides freely in the groove. If there's a problem, refer to the troubleshooting tips on page 23.

Also, since I planned on adding the desk organizer later (refer to page 14), I checked the height of the opening (mine was 10").

RAIL SUPPORT SLAT. To complete the door, a **rail support slat (N)** is glued to the back of the lift rail, see details 'a' and 'b' in drawing at left. This strip gives you something to grip to close the tambour door. There's a 7° angle ripped on one edge to match the angle cut on the lift rail and it's sized to fit between the case sides (40").

MOUNTING HOLES. Once the tambour door is complete the desk could be assembled. But to make finishing easier, I applied a couple coats of wiping varnish (like General Finishes) to the separate pieces. Note: You'll need to remove the desk top installed earlier. And it's a good idea to keep the finish out of the grooves in the sides.

When the finish is dry, the roll-top desk can be assembled. The first step is to install the case on the desk top. This meant drilling mounting holes through the desk top and into the case sides and back.

I centered the case on the desk top and placed masking tape around the outside edges, see Fig. 18. When the case is removed, just measure in from the edge of the tape 3/8" and drill the oversize shank holes.

FINAL ASSEMBLY. Now the door can be installed into the case, and the case screwed to the desk top, see Fig. 18a. Finally, set the desk top on the base and screw it in place, see Fig. 19. ❑

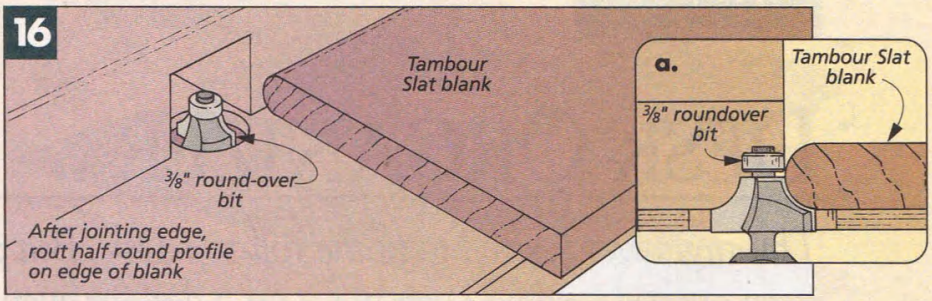

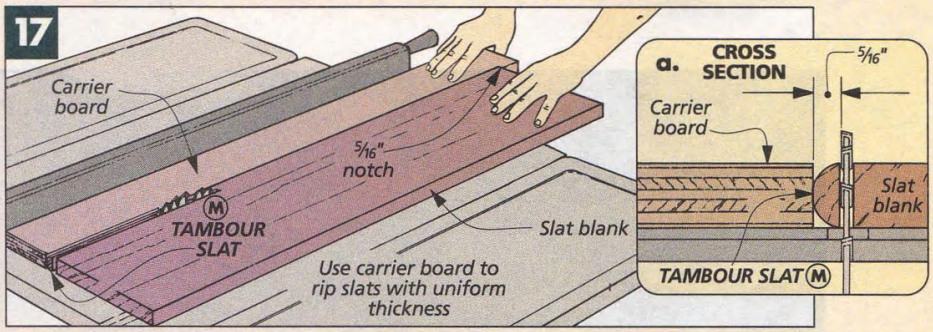

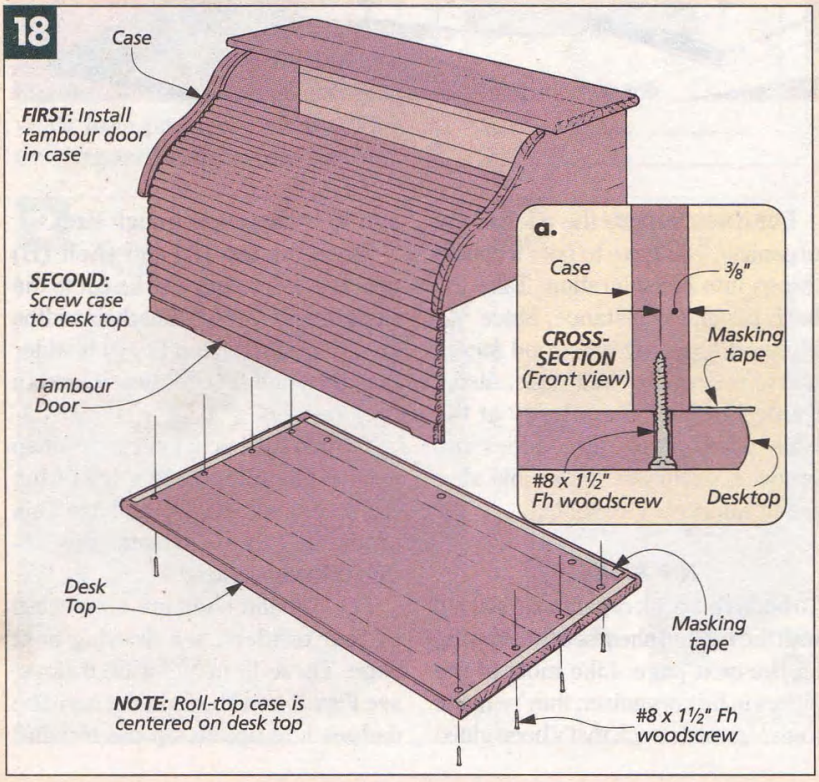

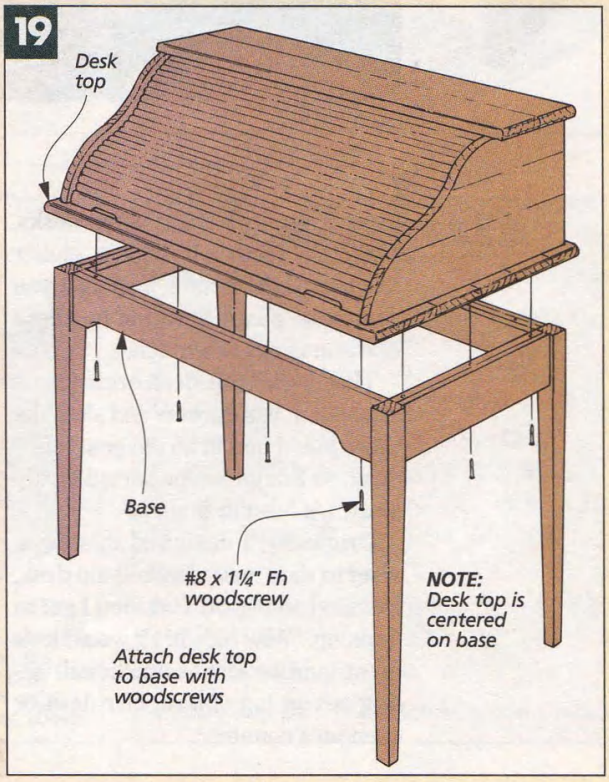

FEATURE PROJECT

DESK ORGANIZER

This organizer is sized to fit the roll-top desk. But it's designed to look good from any side, so you can put it on a desk or even a counter top.

I don't know what it is about desks, but they seem to be built-in "clutter magnets." Letters, bills, junk mail, you name it — all are attracted to a desk like iron filings to a magnet.

That's what this desk organizer is all about. It has drawers and slots like those you'd find in an old post office desk, so things can be sorted neatly away. (At least in theory.)

Originally, I designed this organizer to slide inside the roll-top desk, featured on page 6. But then I got to thinking, "Why hide it?" It would look great (and be just as functional) sitting out on top of a regular desk or even on a counter.

But if you expose the back of the organizer, you have to take a couple things into consideration. Take the back panel, for instance. Since 1/4" plywood has only one good face, I had to veneer the "bad" side. Also, I wanted to hide the joinery at the back. This "stops" the dadoes and grooves, so they're not visible after the organizer is assembled.

TOP & SHELF

To build this desk organizer, I started with the top and shelf, see the drawing on the next page. Like most of the pieces in this organizer, they're made from 1/2"-thick stock that's been glued into 10"-wide panels (rough size).

When the **top (A)** and **shelf (B)** panels are dry, they can be cut to the same length (39 1/2"). But their widths are different. The top (9 1/2") is wider than the shelf (9") because it holds a back panel.

To hold the back, I cut a 1/4"-deep groove along the back edge of the top panel, see Figs. 1 and 1a. This groove is 1/4" wide to match the 1/4"-thick plywood back.

The top and shelf are connected by four dividers, see drawing next page. These fit in 1/2"-wide dadoes, see Figs. 1 and 1b. To make sure the dadoes line up, clamp the top and

shelf together and use a hand-held router and a straightedge guide.

But you don't want to rout all the way across both pieces. Otherwise when the organizer is assembled, the dadoes will be visible from the back. So instead, stop the dadoes when the router bit reaches the groove in the top panel. Then pare the remaining waste with a chisel, see Fig. 1c.

After routing the dadoes, all that's left is to cut an arc in the front edge of the shelf. To draw the arc, you'll need to locate the arc's centerpoint in a piece of scrap, see Fig. 2. Then simply cut it out and sand it smooth.

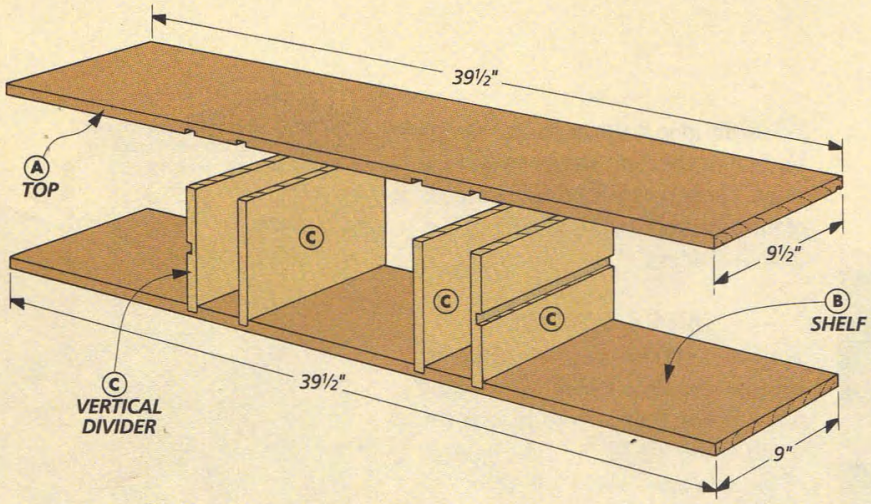

VERTICAL DIVIDERS

Next the dividers can be cut to join the top and shelf. There are four **vertical dividers (C)**, and they're all the same size, see drawing. (Their width is the same as the shelf — 9".)

The dividers are identical except for one thing. The two outside dividers also hold some horizontal dividers added later to create drawer openings. So I routed a 1/4"-deep dado centered on the height of each vertical divider, see Fig. 3.

When the dadoes are routed, the top, shelf, and vertical dividers can all be glued together, see drawing above. Go easy on the glue here; you don't want a lot of squeeze-out to clean up. And use a framing square to check that the assembly is square. If it's not, you'll have problems when adding the sides and horizontal dividers next.

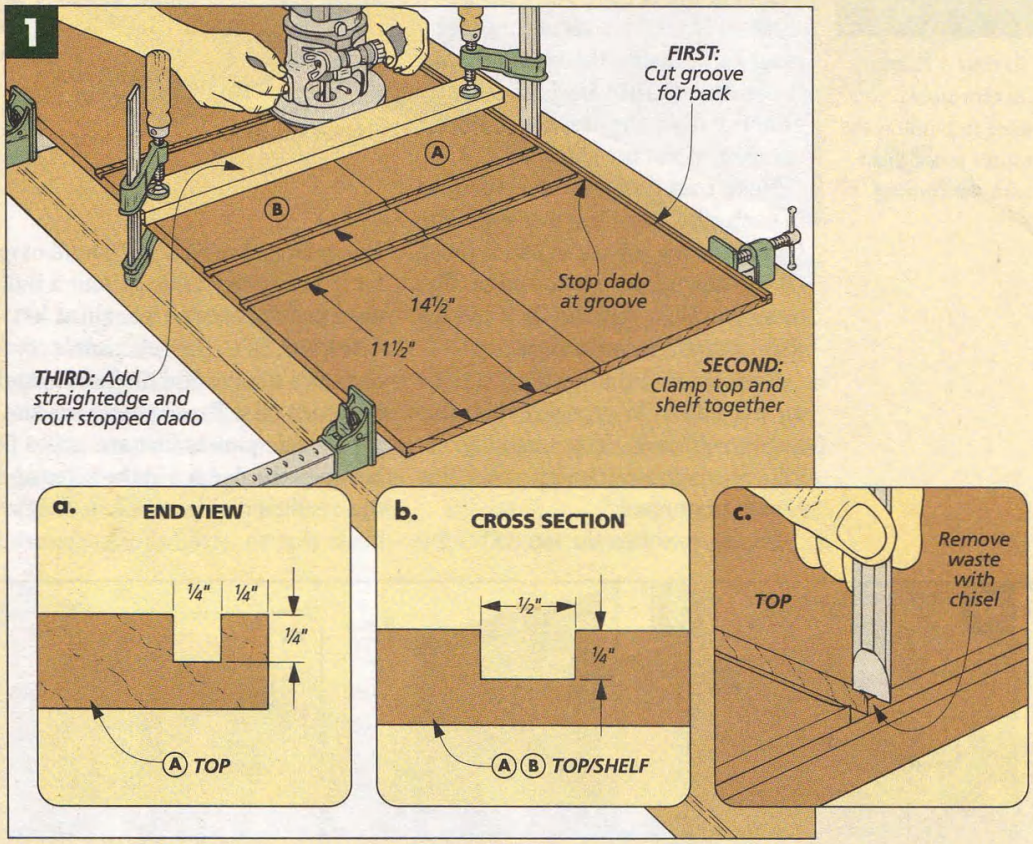

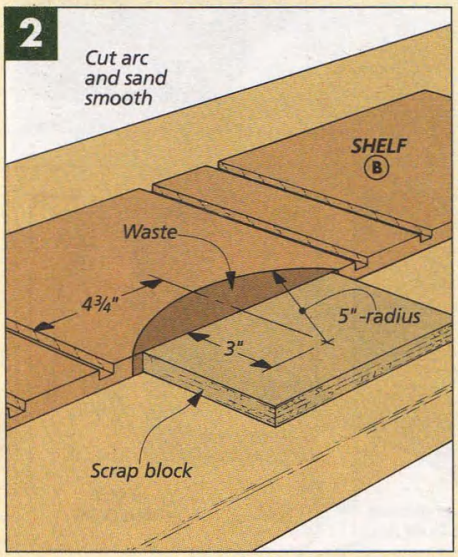

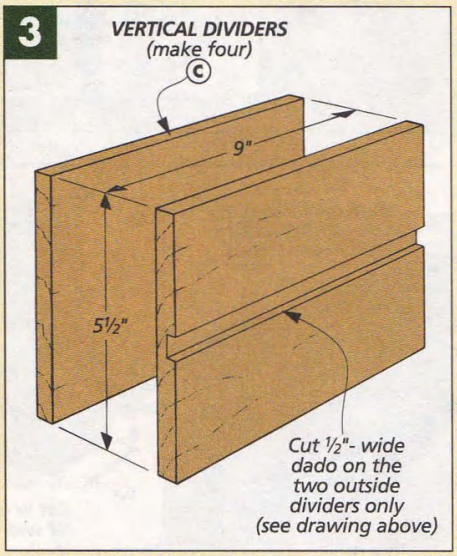

MATERIALS

ORGANIZER		
A	Top (1)	½" x 9½" - 39½"
B	Shelf (1)	½" x 9" - 39½"
C	Vert. Dividers (4)	½" x 9" - 5½"
D	Sides (2)	½" x 9½" - 10"
E	Horiz. Dividers (2)	½" x 9 - 11¾"
F	Back Molding (1)	½" x ¾" - 39½"
G	Back (1)*	¼" ply. - 9¼" x 39½"
H	Filler Strips (2)	¼" x ¼" - 8½"
DRAWER		
I	Fronts/Backs (4)	½" x 2¼" - 11 3/16"
J	Sides (4)	½" x 2¼" - 9"
K	Bottoms (2)	¼" ply. - 8½" x 10 11/16"

*Also Needed: 10" x 40" sheet of cherry veneer

When the glue in the organizer assembly is dry, the next step is to add the sides. These panels sandwich the ends of the assembly and also hold two horizontal dividers.

▲ *To rout a bullnose on thin stock, you need to position the router fence flush with the bearing.*

SIDES & DIVIDERS

The **sides (D)** join the ends of the top and shelf, see Fig. 4. Begin by ripping two 1/2"-thick panels to match the width of the top (9 1/2"). The lengths of the side panels will determine the height of the organizer.

Note: If you're making the organizer to fit inside the roll-top desk, the sides should be just slightly shorter than the desk's tambour opening. (I cut my sides 10" tall.)

Next, rout three 1/4"-deep dadoes in each side, see Figs. 4 and 4a. The first holds the top panel and is located 1/4" down from the top edge. The other two align with the shelf and the dado cut on the vertical divider.

Now to hold the back (and filler strips) added later, each side also needs a 1/2"-wide rabbet, see Fig. 4b. Like the dadoes in the top panel, this rabbet is stopped.

Finally, to soften the top end of the side panels, I used a 1/2" round-over bit in the router table to rout a bullnose profile, see the margin at left.

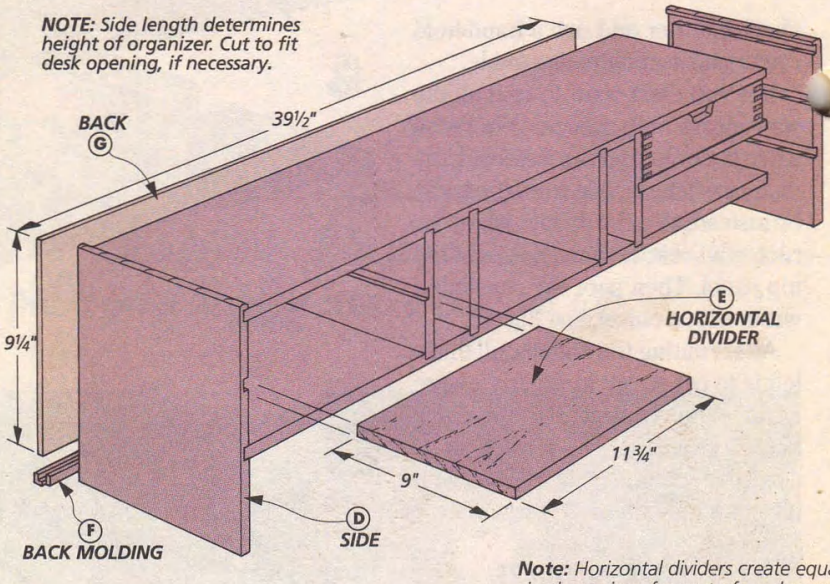

Note: *Horizontal dividers create equal sized openings for up to four drawers. (I made two for this organizer)*

DIVIDERS. With the side panels complete, it's time to add the **horizontal dividers (E)**. These pieces are simply 9"-wide panels that are cut to fit between the dadoes in the sides and the vertical dividers. When they've been cut to size, the horizontal dividers and the side panels can be glued and clamped to the ends of the organizer assembly.

BACK

Now it's time to add the back. Here, I used a piece of 1/4"-thick plywood. The problem is the back isn't very stiff, especially along the bottom. So before adding the plywood panel, I made a

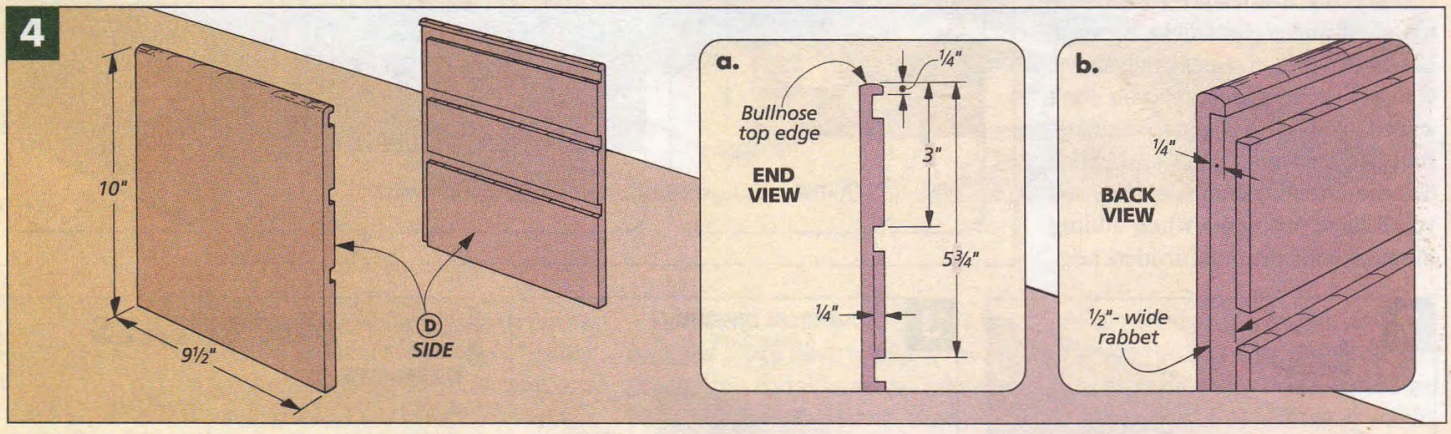

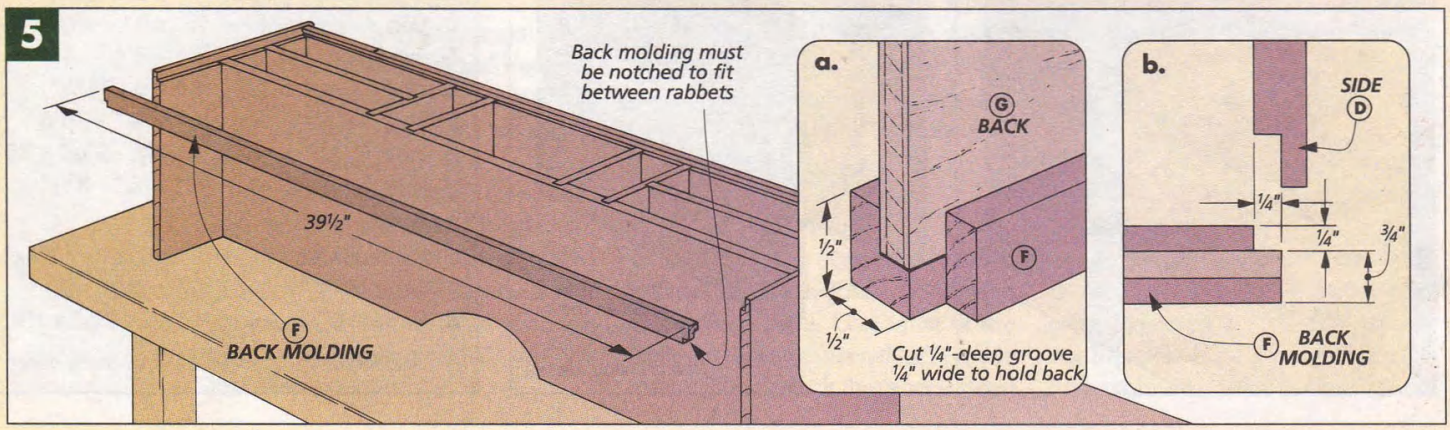

piece of molding to add support.

MOLDING. This **back molding (F)** is cut to fit between the rabbets in the sides, see Fig. 5. But this piece is 3/4" wide, while the rabbets are only 1/2" wide, so I had to notch the front corners to make it fit, see Fig. 5b.

Next I cut a 1/4"-deep groove in the molding to hold the 1/4"-thick plywood back, see Fig. 5a.

BACK. Now that the molding is complete, you can work on the **back (G)**, see drawing at right. Since both sides of the plywood will be visible, I glued veneer to the rough side before cutting it to size. Then I glued the back and the molding to the organizer.

FILLER STRIPS. There's still one more step to complete the back. To hold the back at the sides, I added **filler strips (H)**, see drawing. These 1/4" x 1/4" strips are cut to fit between the top panel and back molding and are simply glued in the rabbet cut on the sides, see drawing above right.

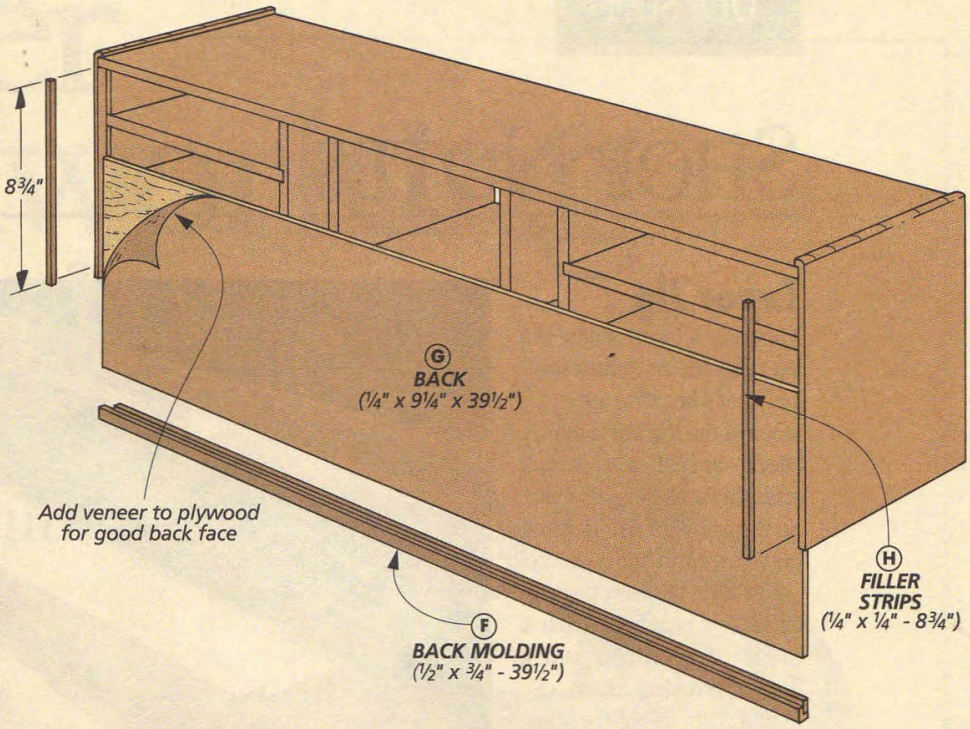

DRAWERS

With the case complete, I built two drawers to fit the organizer. Cut the drawer **fronts/backs (I)**, and **sides (J)** to size, see Fig. 6. (Allow for a 1/32" gap at each side. But the height of each drawer should match its opening.)

The drawer is joined with 1/4" box joints, and the 1/4" plywood **bottom (K)** is held in a groove that's cut in each piece, see Figs. 6a and 6b.

Now before assembling the drawers, I cut an opening for a handle on each front piece, see Fig. 7.

Finally, assemble the drawers and fill the groove openings, see photo. Then trim the top and bottom edges for a 1/32" gap above the drawer. ❑

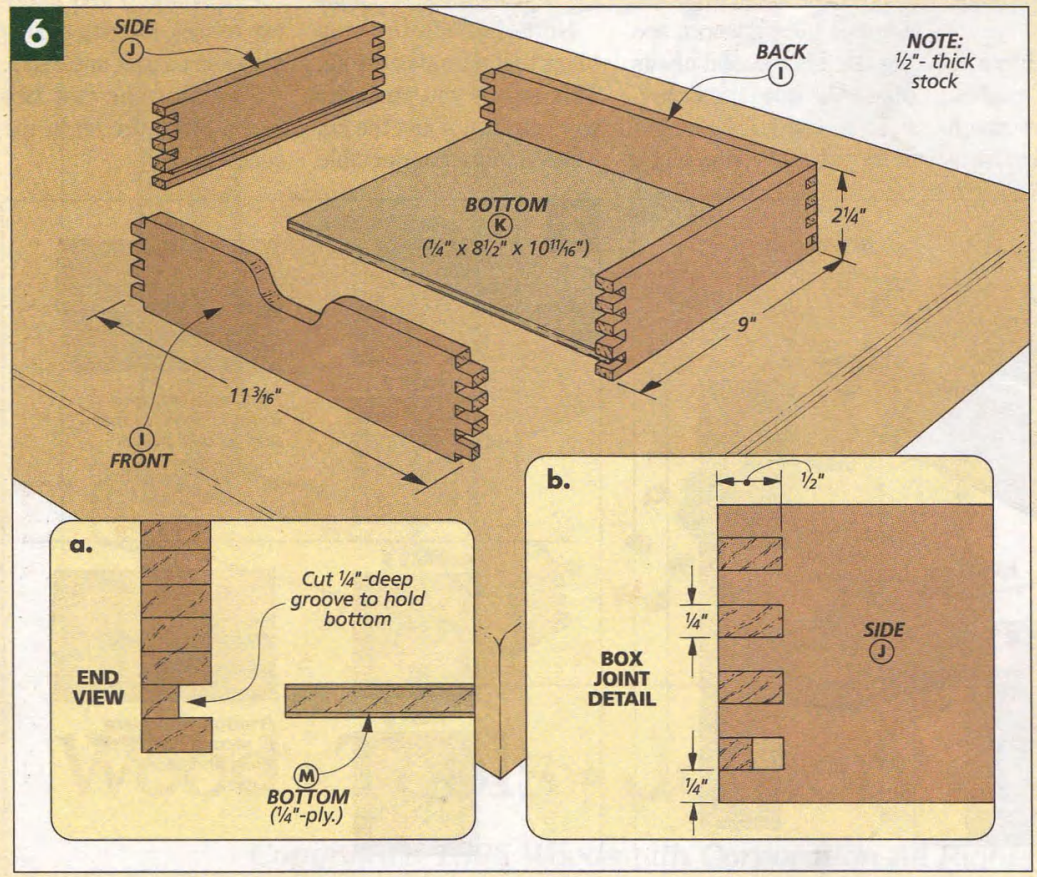

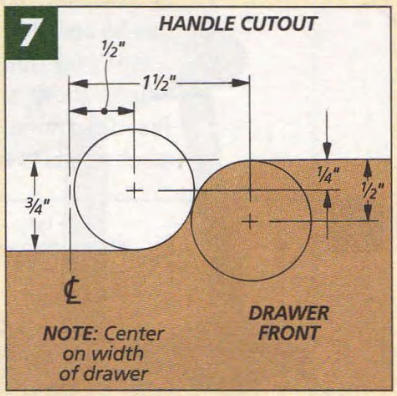

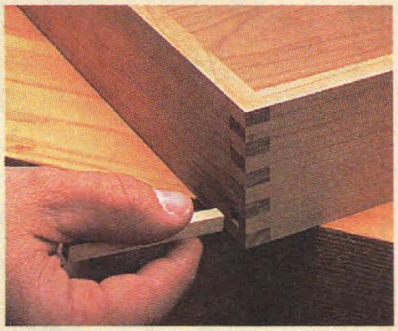

▲ *After each drawer is assembled, the grooves for the drawer bottom will be exposed on the sides. Small hardwood plugs will hide them.*

SHOP NOTES

Taper Jig

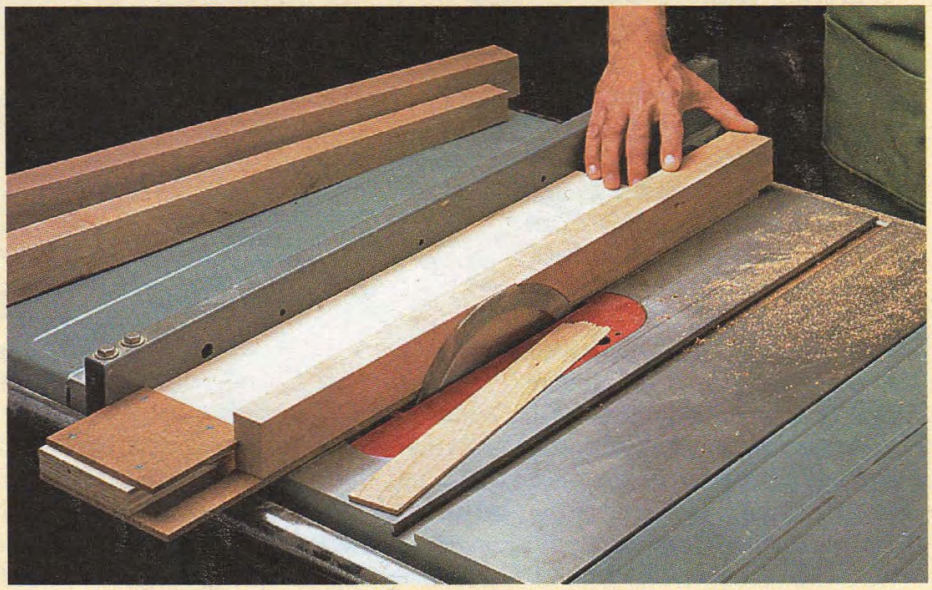

Tapering all four sides of a leg requires an "adjustable" jig. That's because after two faces of the leg are tapered, there aren't any more straight faces to work from. So the angle of the jig must be adjusted to compensate.

For the desk on page 6, I made a taper jig with a piece of plywood and a hardboard stop block, see Fig. 1. These pieces are mounted to a hardboard sled that carries the leg past the blade.

STOP BLOCK. The stop block is the key to the jig. Here, notches offset the leg to set the angle of the taper, see Fig. 1a. There are two notches here so this angle can be adjusted.

But you don't have to worry about any angles. Just determine how much stock needs to be cut from the end of the leg with *each* pass (1/4" in my case). This is how far the first notch needs to be offset from the edge of the plywood, see Fig. 1a. The second one is offset 1/4" from the first.

To determine the length of the taper, the stop block also needs to be positioned lengthwise on the plywood, see Fig. 1b. (The tapers on the desk legs are 22" long.)

Note: I attach the stop block to the front of the jig. This means you push the workpiece, not just the jig. I find it more comfortable and safer to use this way.

USING THE JIG. To use the jig, simply place the leg in the first notch and make two passes, rotating the leg between passes, see Fig. 2.

Then for the last two faces, place the jig in the second notch.

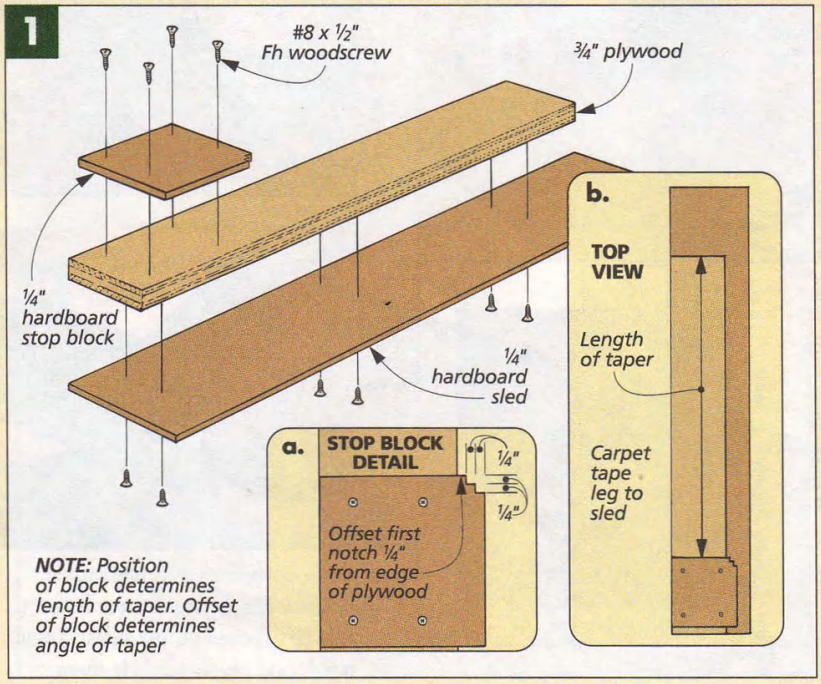

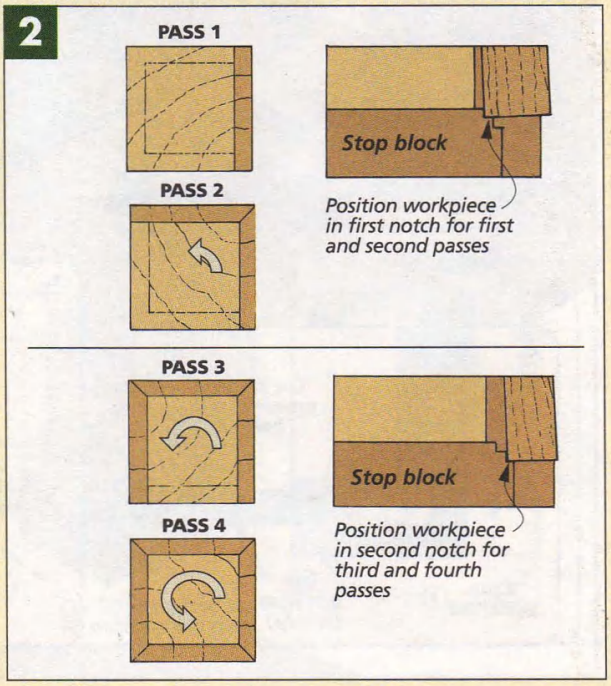

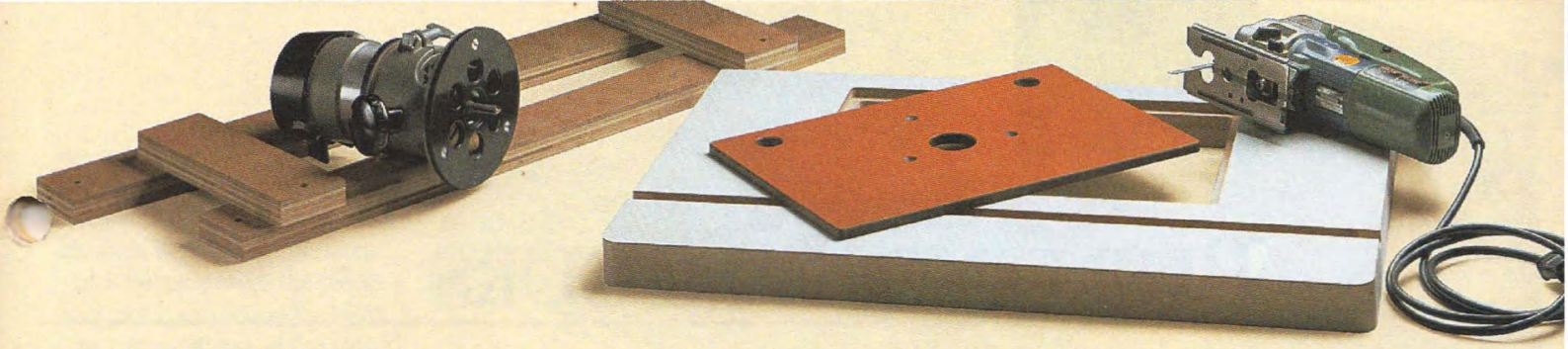

Router Table Insert

Buying or making an insert for a router table is easy. (Just make sure it's large enough to get your router in and out.) But creating the opening that holds the insert is a little more work.

ROUTER OPENING. To begin, you have to cut an opening for your router to fit through. To do this, first set the insert on the table and trace around it, see Fig. 1. (I positioned mine $1\frac{1}{2}$" from the back of the table.)

However, if you cut the opening this size, the insert would fall through. So you need to build a ledge to hold the insert. To do this, I made a second "outline" $\frac{3}{8}$" inside the first, see Fig. 2.

When that's done, drill a hole at each corner and cut between them to remove the waste, see Fig. 2.

LEDGE FOR INSERT. Now it's time to add the ledge that puts the insert flush with the table top. For a tight fit, the opening of this ledge has to match the insert.

To do this, I used the insert as a template and created a "form" around it, see Fig. 3. When the insert is removed, a pattern bit will follow the form to rout the ledge, see box below.

Note: The forms need to be at least 1"-thick so the bearing on the bit has something to ride against.

The important thing here is to get the depth of the bit set so the insert ends up flush with the surface of the table.

Simply place the insert and the router on the form, see Fig. 4. Then lower the bit until it just touches the table, see Fig. 4a. Remove the insert and the depth of the bit will match the thickness of the insert.

Note: When routing the ledge, just remember to move the router clockwise, see Figs. 5 and 5a.

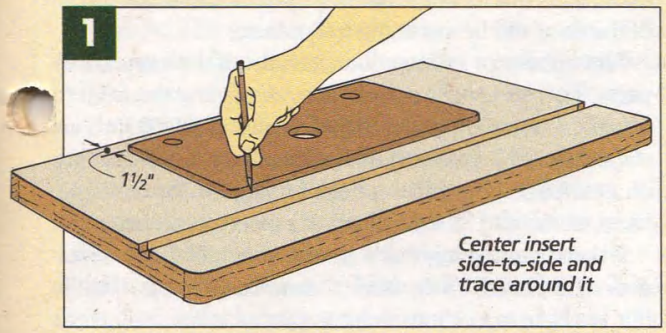

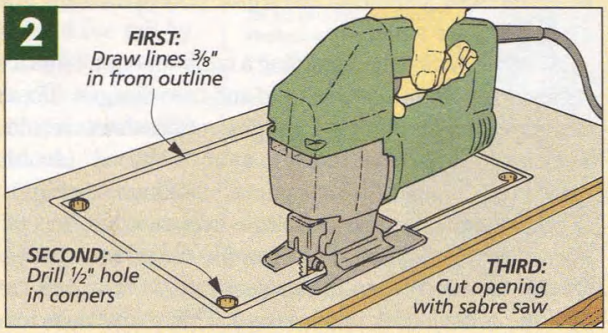

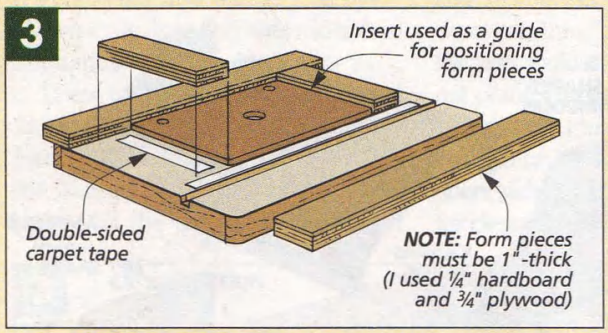

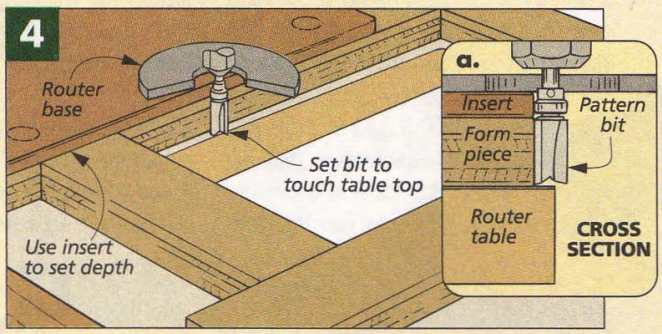

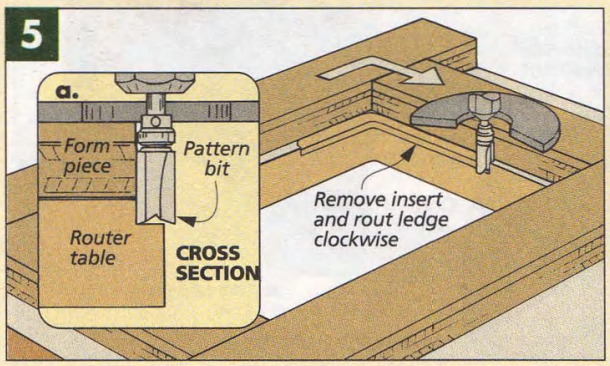

PATTERN BIT

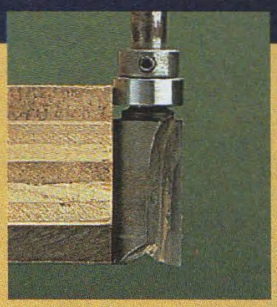

A pattern bit is a flush trim bit with the bearing on the shank, not at the end, see photo. (For sources, see page 35.) Its big advantage is that it can cut a step or opening in the center of a workpiece. However, for shallow cuts, either the template you're following has to be thick (to match the cutter's length), or you'll need to add a spacer.

BUILDING TAMBOURS

Here are some design pointers and building tips that will come in handy when working on and installing tambour doors.

One of the things I enjoy about woodworking is there's usually more than one way to solve a problem. And maybe that's how tambour doors were invented. Someone needed a door that would store out of the way when open.

The "solution", a tambour or roll-top door, seems fairly obvious now. Make it flexible by gluing a bunch of thin slats to a piece of fabric. Then cut a groove for the pieces to follow so the door can slide out of sight inside its own cabinet. That's it. Nothing complicated about it.

Now a lot of people think tambour doors are a mystery. After all, there must be some trick in getting all those pieces to work together as a sliding door. But all you really need is a good design to follow and a little patience cutting and assembling the parts.

DESIGN SHAPE. So when building a tambour door, I find it's easiest to stick to a couple tried-and-true designs. These designs are straightforward and give me consistent results. They incorporate what I refer to as an "s-shaped" (double curve) or "c-shaped" (single curve) tambour, see Fig. 1.

Each design has some advantages over the other, depending on the application. For example, I like to use an s-shaped tambour when the project calls for a wide door (like the roll-top desk in this issue). This shape looks less bulky and more graceful for a large tambour. Plus, adding the extra curve helps the thin slats resist sagging in the middle. And having a door with less sag means it will slide that much more smoothly.

On the other hand, when I need the maximum amount of storage space for a project, a c-shaped tambour is a better choice. It provides the largest usable space behind the door. This comes in handy when you need to store a large mixer or blender in an "appliance garage" in the kitchen.

TAMBOUR ANATOMY. Deciding which shape to use is the first step to building a tambour door. Once that's taken care of, the next thing to consider are the parts of the tambour. What this means is figuring out how the actual pieces of the door will be cut and put together.

All tambour or roll-top doors consist of the same three parts. There's usually a thick, heavier piece at the front (a lift rail), followed by a quantity of thinner pieces (tambour slats), all held together with a piece of fabric, see drawing on next page. The roll-top desk on page 6, for example, has a lift rail and 28 slats glued to a piece of canvas.

If there's one thing that's similar about all the tambour doors that I build, it's the fabric. I always use canvas. Usually this is a light to medium-weight artist's canvas available at

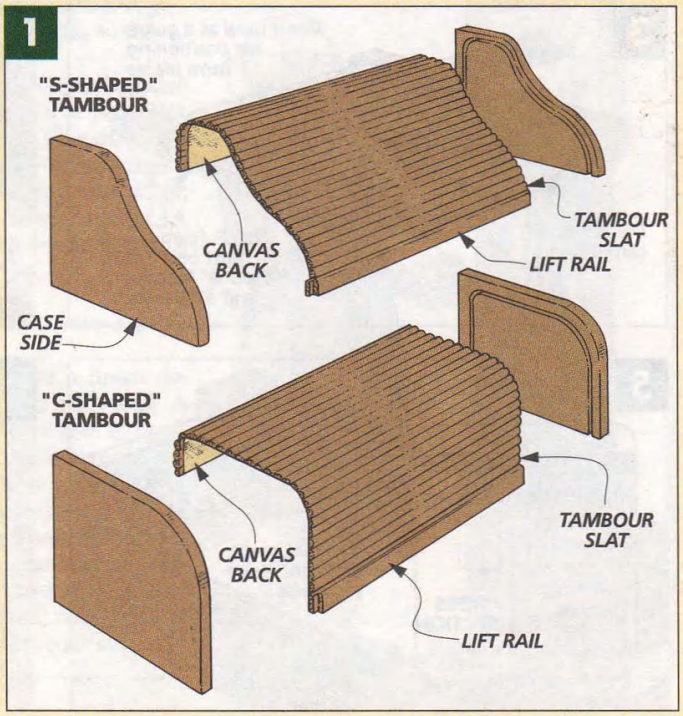

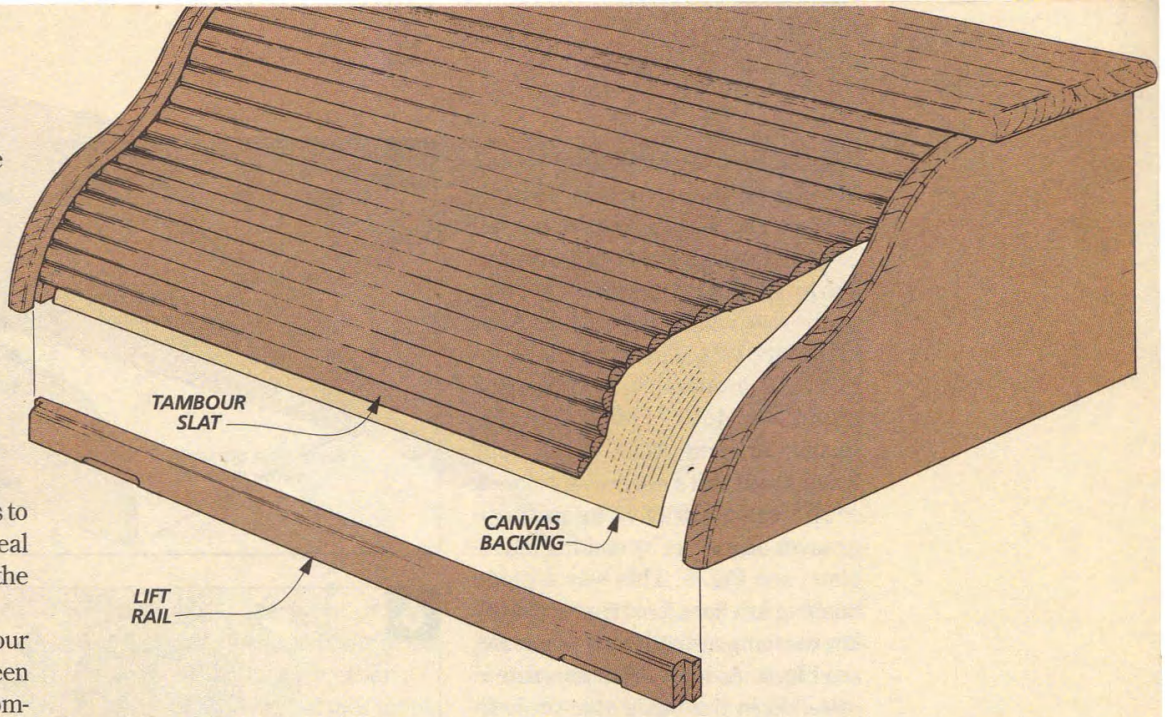

art supply stores. Some people like using a dark denim backing because it doesn't show between the slats. But whatever the material, it not only holds the pieces together, it also acts as the hinge. The canvas allows all the individual pieces to flex as the door slides through the groove.

But it takes more than a piece of canvas to allow a door to flex in more than one direction (like it has to for an s-shaped tambour). The real "secret" is the style (or profile) of the tambour lift rail and slats.

STYLE. The key to having a tambour flex is building in clearance between the slats. This can be easily accomplished by changing the slat profile. I wanted the door on the roll-top desk (featured on page 6) to move through some pretty tight curves. By rounding over the slats, they can flex or move back and forth as the door moves through the curved groove, see Figs. 3 and 3a. The greater the clearance between the slats, the tighter the curve the door can follow.

SLAT WIDTH. But there are a couple of other things that come into play to allow the door to slide smoothly through the groove. One is adjusting the width of the slat, see Fig. 4. A wider slat makes a sturdier door. But a wide slat can't slide through a tight curve. It's physically impossible. That's why you typically don't find slats wider than 1" on most tambour doors.

There is one exception to this: the lift rail located at the front of the door. Here you want a wide piece to take all the wear and tear of being pushed and pulled as the door is opened and closed. It's traditionally cut wider and thicker to make it stronger (like on the roll-top desk).

Getting a wide piece like this to work in a groove doesn't require any woodworking magic. Simply reduce the thickness on the ends of the rail by cutting a rabbet to create a tongue, see Fig. 2. For the desk, this tongue was only $1/4$"-thick so it could slide smoothly in the $3/8$"-wide groove.

THICKNESS. When you reduce the thickness of a lift rail or slat, you can make it wider and still have it slide smoothly. This is because you've created more clearance around it. Of course you can go too far and make them too thin. Then on a wide door the slats could start to sag and even fall out of the grooves.

CLEARANCE. Finally, there's one other consideration for making tambour doors slide smoothly. You need to allow for clearance between the slat and the groove. You can't expect a $3/8$"-thick slat to slide very well in a $3/8$"-wide groove. The tambour door in the roll-top desk used $5/16$"-thick slats in a $3/8$" groove, see Fig. 2. This provided just enough clearance so the tambour door would slide smoothly but without rattling around when it moves.

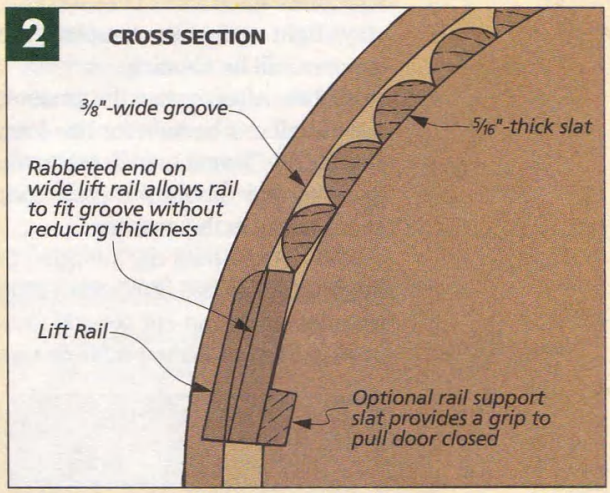

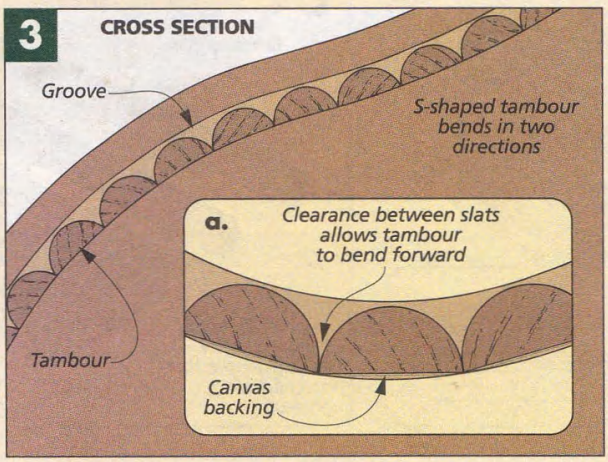

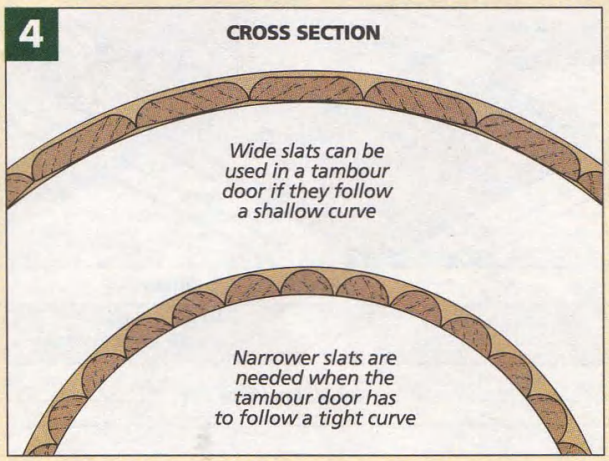

Okay, so now you know there's more to designing a tambour door than gluing some sticks to a piece of canvas. The next step is to put this information to use. For me this means starting on the case panels that hold the door.

TAMBOUR CASE. The first step is to make the grooves on the sides that guide the door. They're mirror images of each other so the door doesn't bind as it's opened and closed.

The easiest way to keep these grooves aligned is by making a template, see Fig. 5. This way a guide bushing in a hand-held router can follow the template and rout the groove, see Fig. 6. As long as the template is installed in the same spot on both side pieces and the guide bushing stays tight against the template, the grooves will be identical.

LIFT RAIL. After routing the grooves, the lift rail can be built for the door. Just cut it to length to fit between the grooves and rabbet the ends so it slides easily in the grooves.

SLATS. Next I turn my attention to the tambour slats. I start with a wide piece of stock and cut several slats from it. First, rout the profile on one edge, see Figs. 7 and 7a. Then switch to the table saw to rip the slats from the edge of the board.

To make cutting these thin slats safer, I use a carrier board with a small notch cut at one end that matches the thickness of the slats, see Figs. 8 and 8a. This way as the slat is cut from the blank, the carrier will push it safely past the blade.

I also like to number the slats as they're cut, see Fig. 8b. That way they can be reassembled for the best color and appearance. And while you have the saw and router set up, make some extras. There's always a few slats that twist or bow and need replacing.

GLUE-UP. To hold the slats and lift rail together, they're glued to a piece of canvas. In this case, I don't use yellow glue. I prefer contact adhesive. A

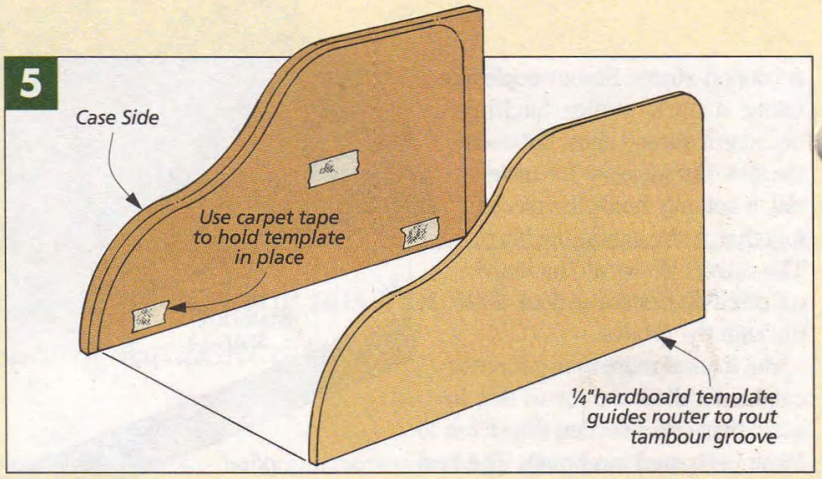

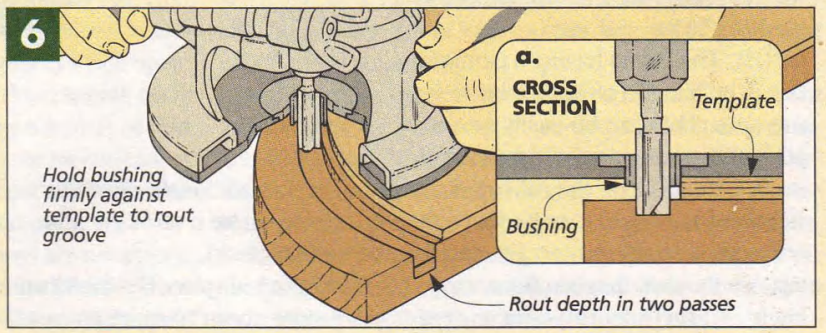

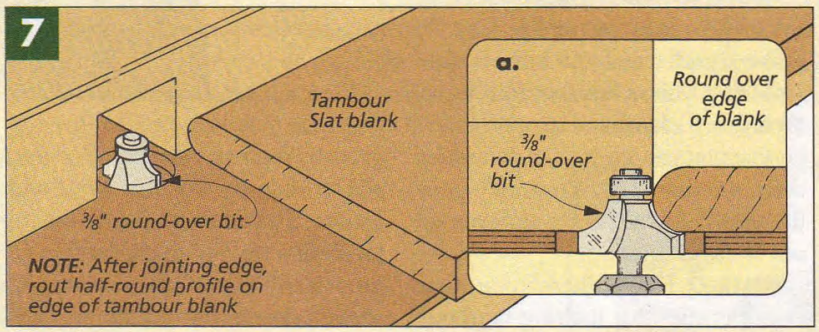

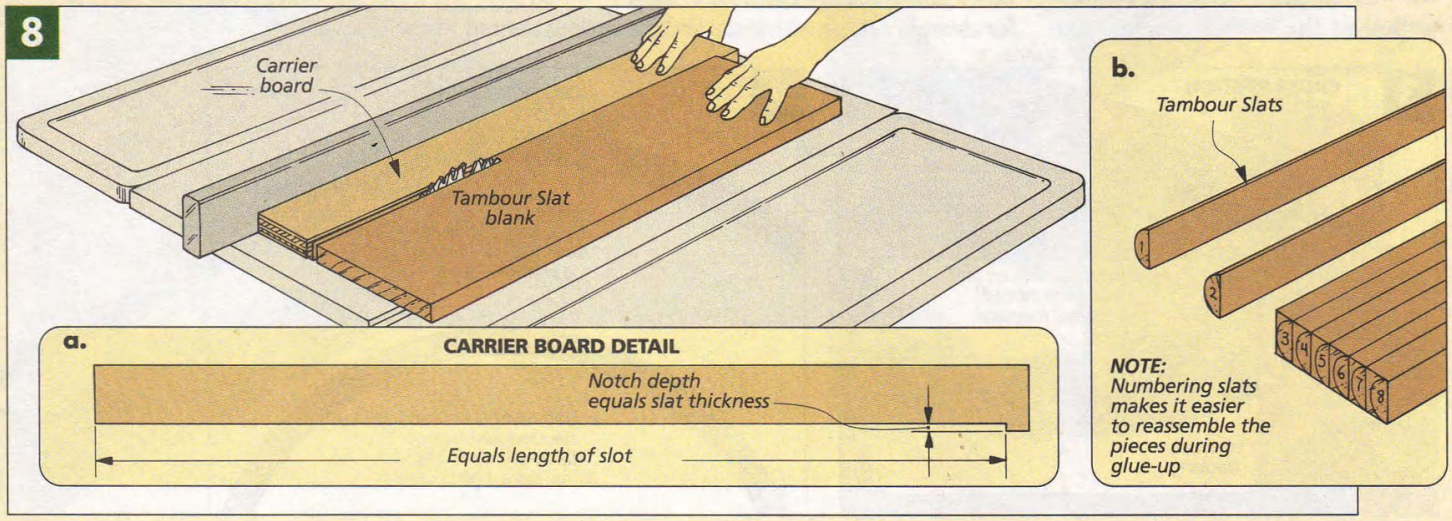

small roller spreads the adhesive quickly, and it's not nearly as messy. Plus, there's no squeeze out, and you don't need to worry about clamps.

Now before you start, trim the canvas so it's narrower than the slats. This keeps the canvas out of the groove. Then use a couple coats of adhesive for a good bond. This is easy on a big piece of canvas. But it can be tedious work on the narrow slats. So I temporarily assemble a few slats by taping the ends, see Fig. 9.

The tape holds the slats together so there's a large surface to work on. And once you remove it, the ends are free of glue. (Glue on the slats would keep them from sliding freely.)

ASSEMBLY. Now the challenge is getting the slats and lift rail installed on the canvas so they're square to each other. Here's where an assembly jig helps, see Fig. 10. This jig is just a couple of pieces of scrap screwed to a piece of plywood at right angles to one another. These guide boards keep the door pieces straight at the sides and parallel to each other.

I stretch out the canvas first (adhesive side up) so it's flat and tight. Just screw a guide board at one end to hold it in place, stretch it out, and secure the other end with a piece of scrap. Then using a framing square, install the other guide board square to the first one.

Now the lift rail and slats can be installed on the canvas. Just remember, when they make contact, you won't be able to move them. It's also a good idea to periodically check that the slats are running true, see Fig. 11.

After the slats are all in place, tap them with a mallet to remove any air gaps under the slats. Finally, to complete the door, trim off the excess canvas at the end. ❑

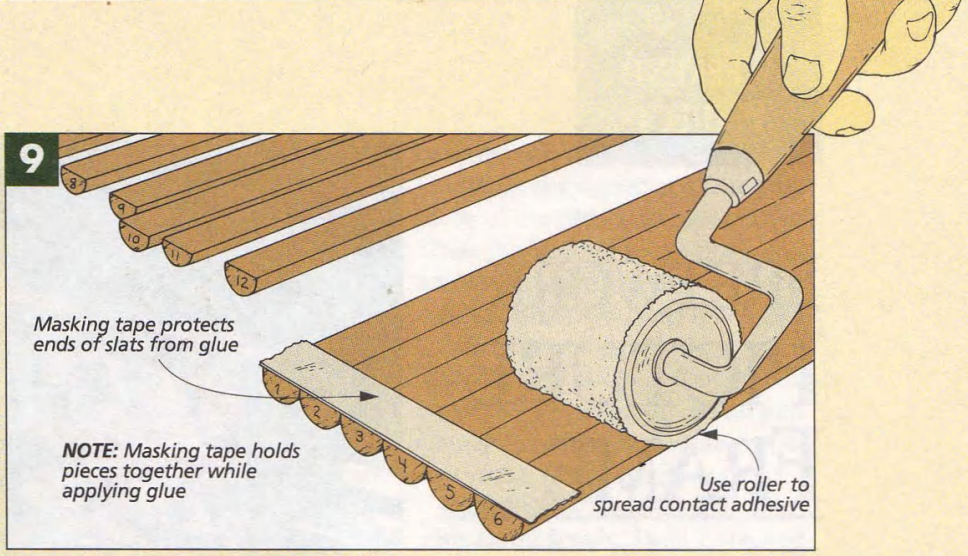

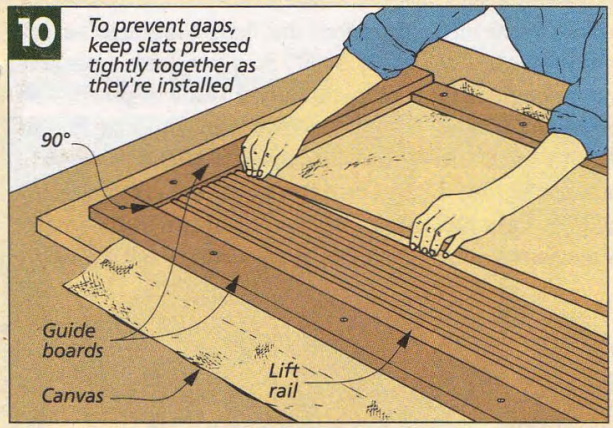

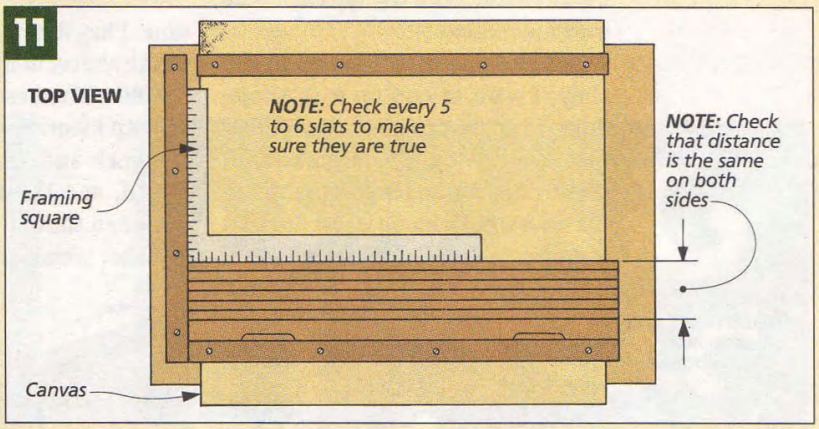

TROUBLESHOOTING TAMBOUR MOVEMENT

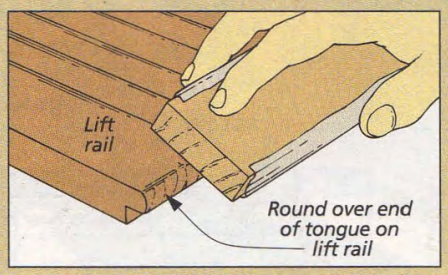

Lift rail. *When a tambour won't slide freely, check the lift rail first. The sharp corners and edges can hang up in the groove. Use a sanding block to round over the end of the tongue.*

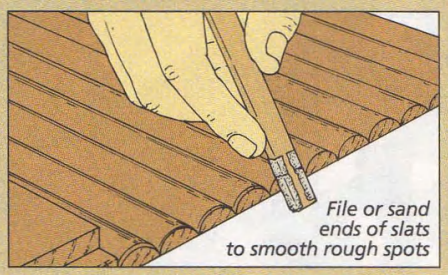

Slats. *The slats can also hang up in the groove. Here again, round over the top and bottom ends. But because the groove is shallow, keep the radius small so it's not exposed.*

Sand & wax. *It's always a good idea to sand the groove lightly to remove any chatter marks left by the router. Then apply a coat of paste wax so the door will slide freely.*

FRETWORK PICTURE FRAME

With a scroll saw and a few extra hours, you can turn a plain frame into this elegant one.

Occasionally, I enjoy sitting down and cutting fretwork patterns with my scroll saw. The change in pace is a nice break from my typical woodworking routine.

But like any time I spend in the shop, I want to end up with something I can be proud of. Something that belongs on a mantle, a night stand, or in a grandchild's bedroom.

This fretwork frame is just the kind of project I enjoy. It doesn't take much time. Plus, it turns a plain frame into an attractive, heirloom project.

PANELS. The best way to begin is to cut two identical panels: one for the fretwork and another to back the photo, see the drawing below. I designed them to hold 3x5 photos. But after taking a few measurements, I realized that 3x5 photos aren't exactly 3" by 5". So if you have a particular picture you want to put in this frame, cut the panels to match your photo. (My panels were $3\frac{1}{2}$" x $4\frac{3}{4}$".)

Once the panels are cut to size, it's time to cut the fretwork pattern in one of the panels. So set the other

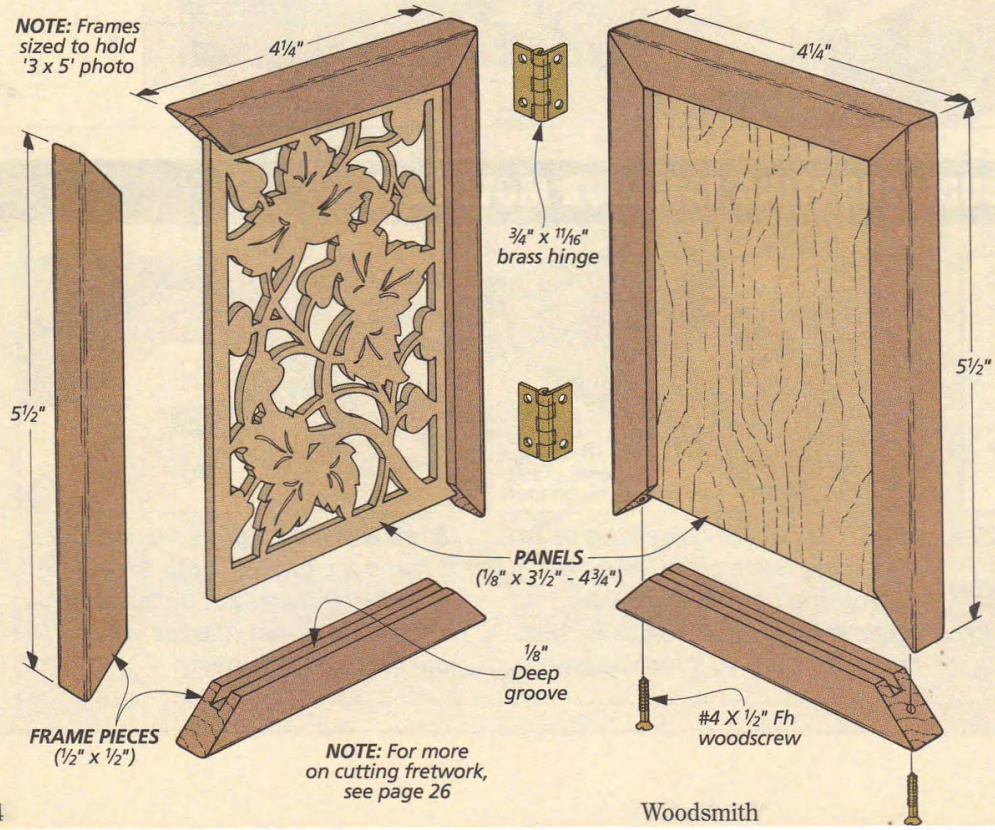

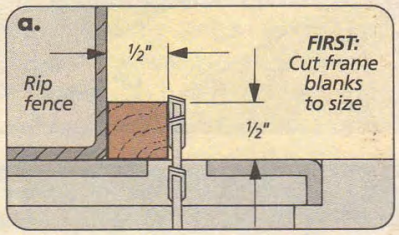

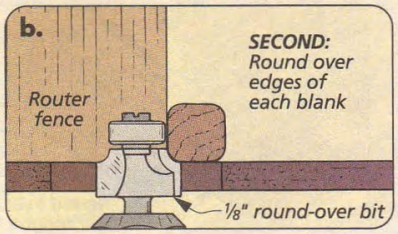

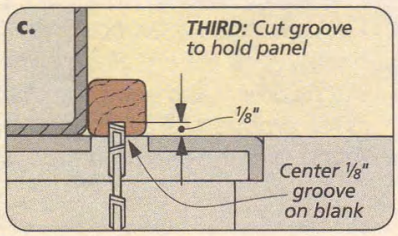

panel aside, and photocopy one of the patterns shown below. For more on cutting fretwork patterns, see the article on page 26.

FRAMES. When the fretwork is complete, the panels are ready for the frame pieces. I started with extra-long 1/2" x 1/2" blanks, see detail 'a' on the previous page. Just be sure to make a few extra. You'll need them when setting up the cuts.

I wanted the frames to be simple, so the attention would be on the photo and the fretwork. So for decoration, all I did was round over the edges of the blanks, see detail 'b'.

Next, to hold the panels, a centered groove is cut in each piece, see detail 'c'. This groove should be just wide enough to hold the panels. With my 1/8" thick panels, a single pass on the table saw with a combination blade was all that was needed.

ASSEMBLY. Now the frame pieces are ready to be mitered to finished length and then assembled around the panels. With the frame for the fretwork, this is simply a matter of gluing and clamping the frame around the panel.

But the frame for the photo has to be assembled a little differently. Here, I glued up one corner at a time until three of the pieces were together. Then the bottom piece is simply screwed in place, see Fig. 1.

At this point, the panel that backs the photo fits too snug in the grooves to include the photo and an acetate cover. So I sanded the panel just enough to reduce its thickness until everything fit into the grooves.

FINISH. Finally, I finished the frames with an oil finish. Then I stacked them together and joined them with a pair of brass hinges, see Fig. 2. ❑

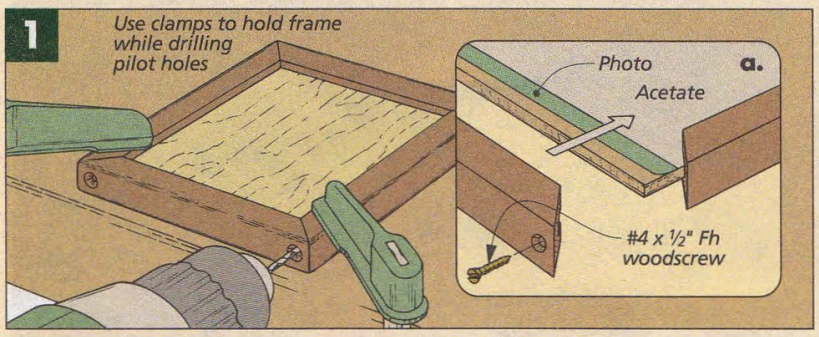

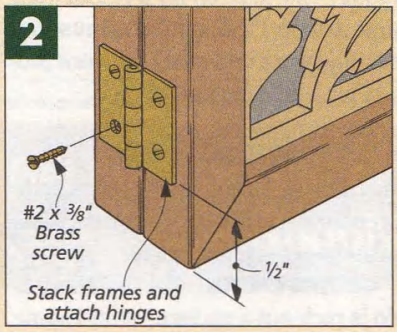

Full-size Patterns

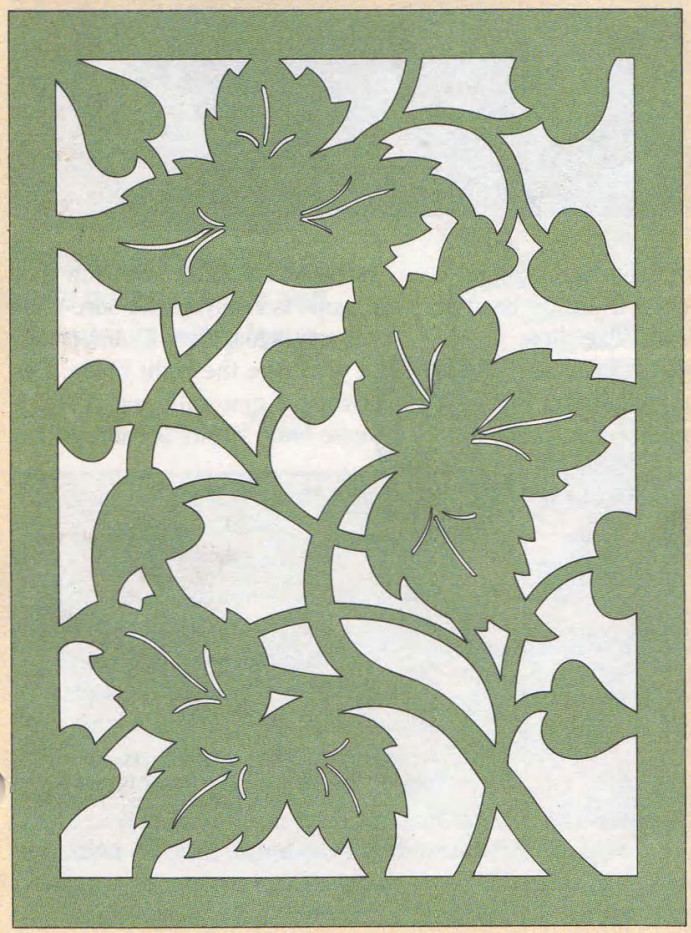

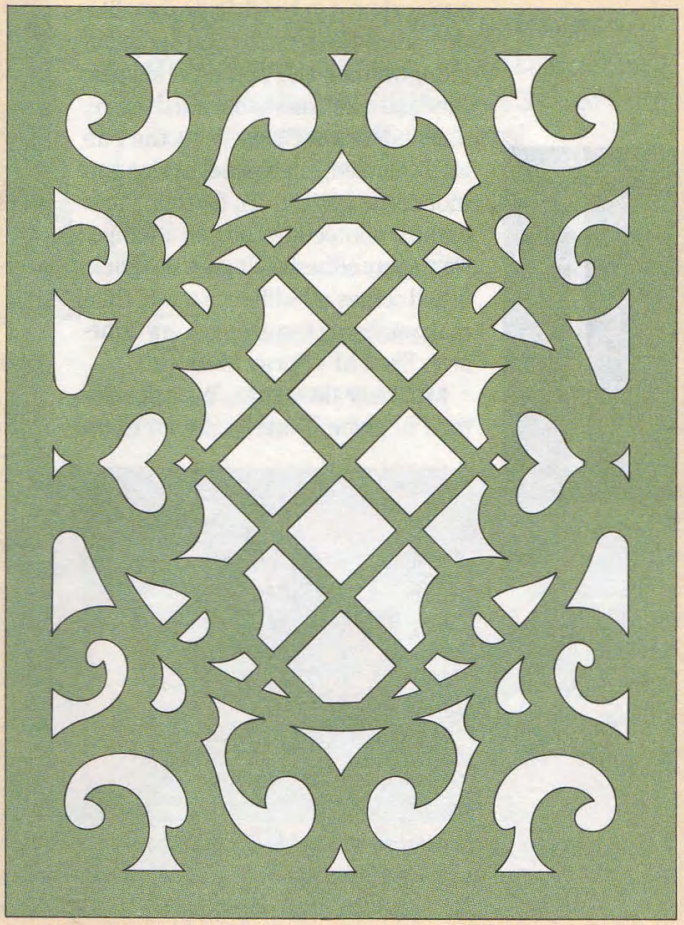

FRETWORK TECHNIQUE

Want a change of pace? Pull up a chair and cut out some fretwork patterns with your scroll saw. Here are some simple tips to get you started.

My time in the shop is relaxing, even though most of the work I do requires me to be on my feet. But from time to time, I'll sit in front of my scroll saw and work on a small fretwork project for a little change of pace.

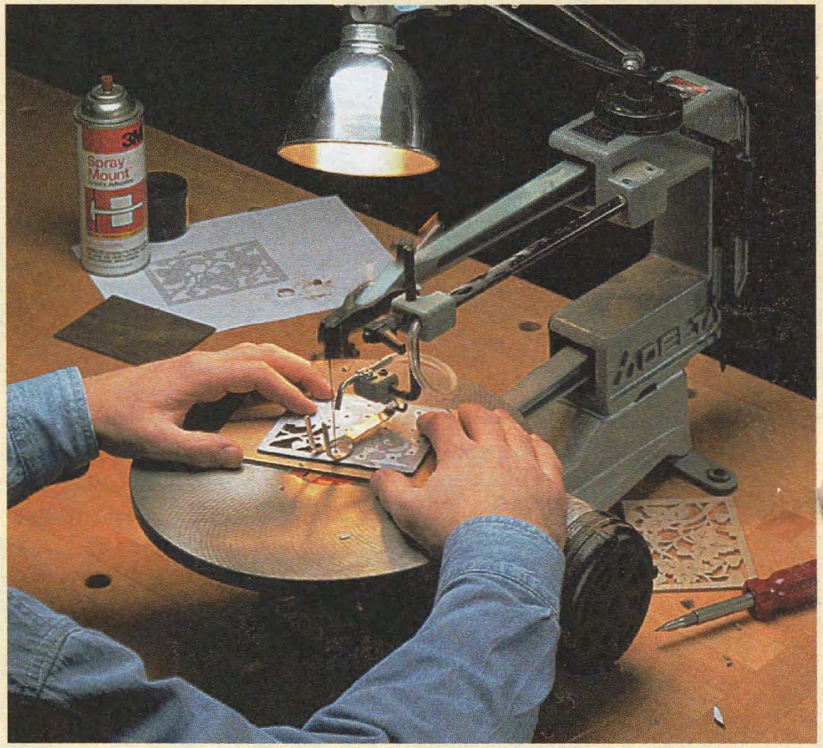

GETTING READY

Just like any project, there's a little preparation to be done before you can actually get started cutting.

CHOOSING A PATTERN. The first thing to do is pick out a pattern — and some are easier than others. I find an organic design with curved, flowing lines, like the vine pattern on page 25, is easier than a geometric design, like the latticed pattern. It's harder to cut straight lines and repeated shapes. Any "mistake" stands out much more.

MOUNTING A PATTERN. With the pattern selected, cut a panel to size and mount the pattern. To do this, I first make a photocopy and use a temporary spray adhesive. It goes on quickly and comes off without a mess. (Just make sure you use a temporary adhesive, like 3M's Spray Mount.)

BACKING UP THE PATTERN. With the pattern in place, I often take an extra precaution — especially on panels that will be seen from the back as well as the front (like those on the picture frames). I use a backing board to reduce the chipout on the back side of the panel, see drawing below.

PREPARING THE SCROLL SAW. Now that the panel is ready, make sure your scroll saw is too. First, it's important that you have the right blade. For fretwork, I generally use a No. 5 reverse tooth blade, see margin on this, I use a reverse tooth blade and carpet tape the panel to a backing board made from 1/8" hardboard.

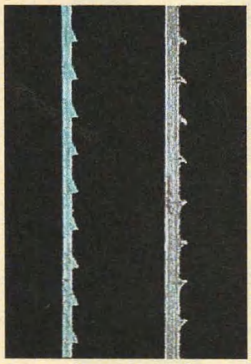

▲ *Unlike a skip tooth blade (left), the teeth at the bottom of a reverse tooth blade face up. This way, the bottom teeth cut on the upstroke to reduce chipout.*

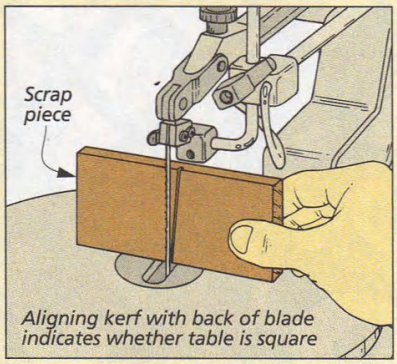

Squaring the table. *To square a scroll saw table, cut a kerf. Then line up the kerf with the back of the blade.*

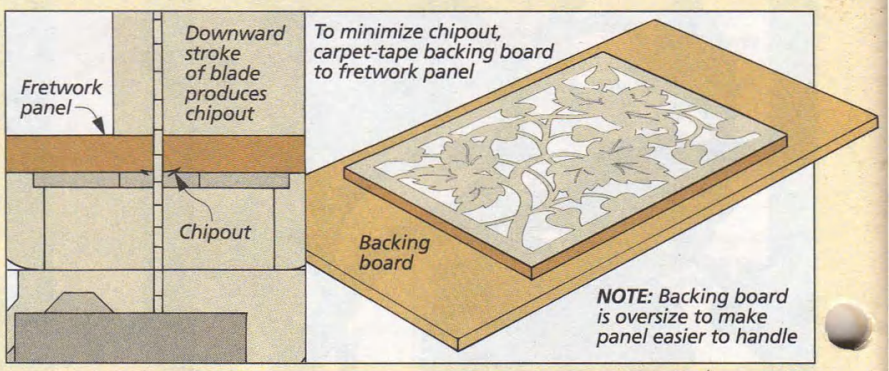

Backing board. *The downward stroke of a scroll saw blade tends to chip out the bottom face of a panel. To minimize*

opposite page. (For scroll saw supplies, see page 35.)

With the blade installed, I tension it so it will only flex 1/8" front-to-back under finger pressure. Then I square up the table, see lower left-hand drawing on previous page.

GETTING STARTED

Now you're ready to start the fretwork. But actually, the place to begin is at the drill press, not the scroll saw.

STARTER HOLES. Because fretwork is mostly inside cuts, the first step is to drill starter holes so you can feed the scroll saw blade through the panel, see the drawings top right.

MAKING THE CUTS. When the holes are drilled, you can begin cutting. With patterns like those on page 25, there's no particular progression. But some patterns have one or two very large openings. A large opening will usually leave the panel fragile in some areas, so I cut them last.

I tend to remove the waste from an opening in small pieces, instead of trying to get it all in one shot. For example, some sharp corners I'll cut in two or three steps, see drawings at right. For other corners, the trick when rotating the panel is to push the piece against the sides and back of the blade (the edges that don't cut).

With fretwork, the thing that takes some getting used to is rotating the panel as you work. Fortunately, all this takes is a little practice. ❑

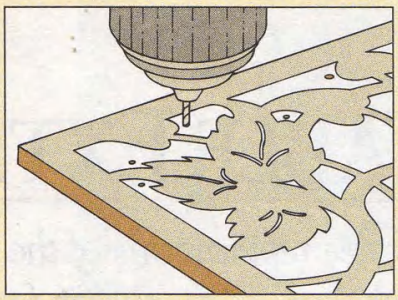

***Starter holes**. Drill 1/8" holes wherever you can. But the small veining in this pattern requires 1/16" starter holes.*

***Hole locations**. Drill starter holes at easy "entry points." But keep them away from the lines to avoid chipout.*

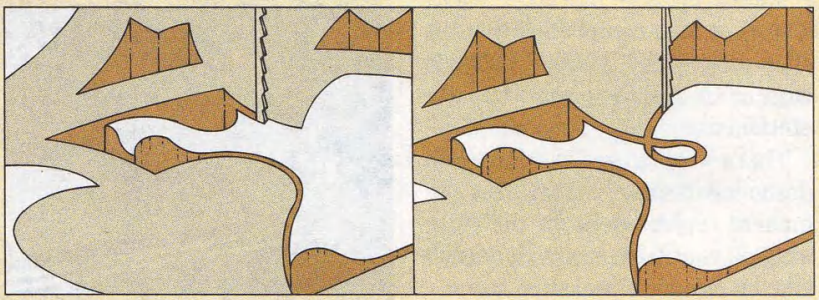

***Cutting outside corners**. Clean sharp corners aren't difficult — just take your time. To cut an outside corner, you don't need to make a quick, sharp turn. Instead, loop your way around in the opposite direction.*

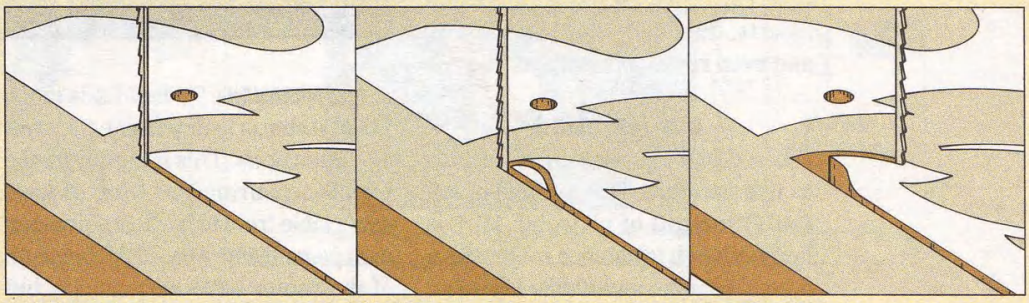

***Inside corners**. Instead of cutting an inside corner in a single pass, I often do it in three steps. First, cut into the corner (left). Then back out and loop around from the other side (center). Now spin the piece around so you can continue cutting out from the corner (right).*

FINISHING TOUCHES

Here are a couple tricks I use to put the finishing touches on a fretwork panel.

Tiny ridges, kerfs, and burn marks are common problems. Traditionally, small files (rifflers) are used for getting into the fretwork openings. But I found a modern version I like: an inexpensive diamond file, see left photo. (For sources, see page 35.)

As for applying a finish, I get into the tiny openings by dipping the panel in an oil finish, see right photo. To remove the excess finish, you can blot the panel dry with a cloth or blow it out with a compressed air.

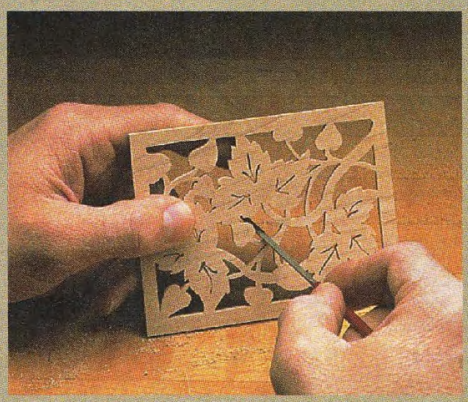

▲ *For final touch-ups, I use a half-round diamond file. It has a round side and a flat side for both curved and flat edges.*

▲ *When dipping a fretwork panel, aluminum foil shaped into a tray acts as a reservoir for the finish.*

ROUTER TABLE EXTENSION

This space-saving router table replaces one of the wings on your table saw. Its fence temporarily attaches to your saw's rip fence.

I don't ever recall meeting a woodworker who complained that his shop was too big. Whether a shop is large or small, it's important to make efficient use of every square foot.

That's what we had in mind when designing this router table. It's a permanent replacement for the right wing on your table saw, so it doesn't take up any additional shop space.

We also designed a router fence that attaches to your saw's rip fence. It's simple, but it does have some interesting features: replaceable inserts, dust collection capabilities, and even router bit storage.

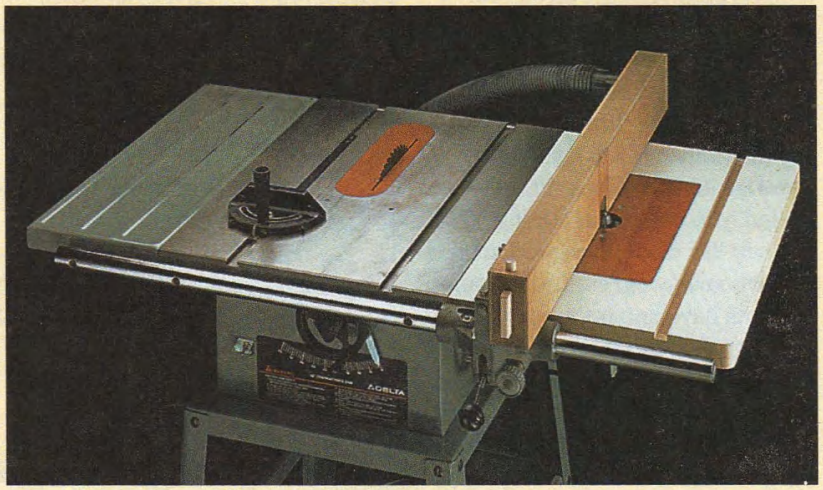

ROUTER TABLE

When designing this table, I decided to use medium density fiberboard (MDF) instead of plywood. MDF is heavy enough to dampen router vibration; it's stable, and unlike plywood, you'll get a clean edge when routing the opening for the insert. (For more on MDF, see page 35.)

FIND DIMENSIONS. To build this table, the first step is to determine the overall dimensions. This is simply a matter of measuring the wing of your saw's table front to back, see drawing next page. (Mine was 27".) The depth of the router table isn't crucial, but you do want it to extend beyond the table saw rails. Otherwise, you'll run into them when working with the router. (My router table is 18" deep.)

LAMINATE TOP. With the size of the table determined, I laminated two pieces of MDF and cut them to size, see drawing below. Just keep in mind that this is $1\frac{1}{2}$" less than the overall size. That's because a $\frac{3}{4}$"-thick hardwood edging covers the MDF on all sides to provide better holding power when screwing the table to the saw.

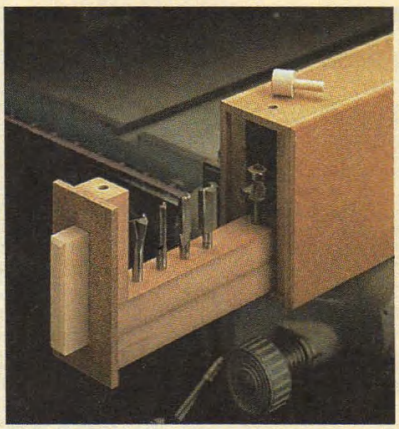

▲ *We made good use of every square inch of this router fence. There's even a router bit storage tray that slides inside the fence. Plans for the fence begin on page 31.*

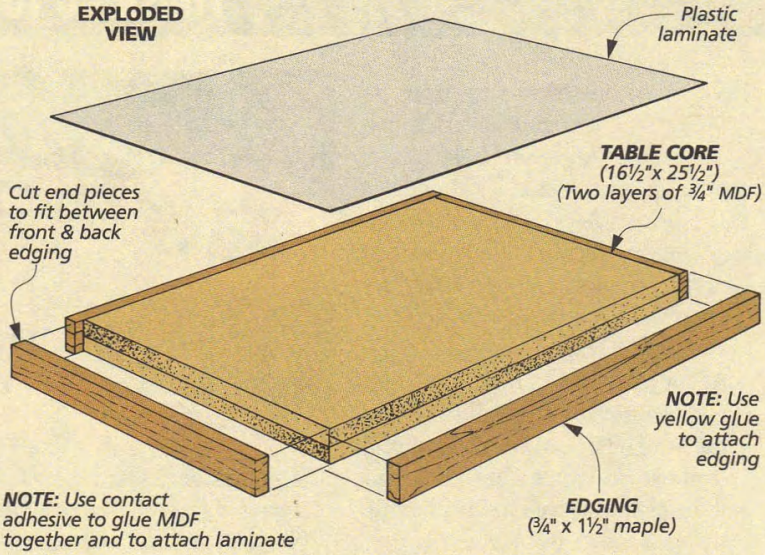

After the edging strips were glued on, I rounded the front corners, see detail 'a' in drawing at right. Then I glued on a piece of laminate to create a smooth surface, see box below.

Finally, trim the laminate with a flush trim bit and soften the sharp edges slightly, see Fig. 1.

ROUTER INSERT. Now you can add the insert that holds the router. I bought my insert with pre-drilled holes, see page 35. But you can make your own from 3/8" material. All it needs are three holes: one for the bit opening and two for the handles, see Fig. 2.

Once you have your insert in hand, you can install it in your table. This process takes two steps: cutting an opening for the router and routing a ledge for the insert to sit on. For more on this technique, see page 19.

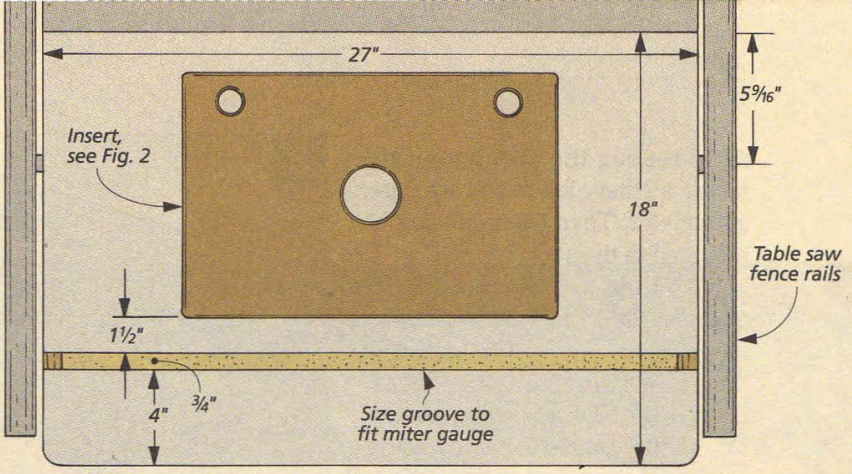

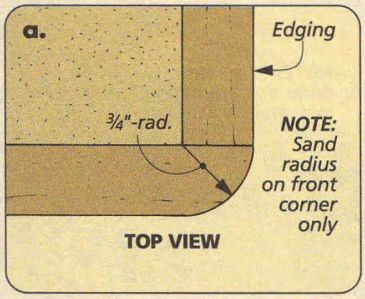

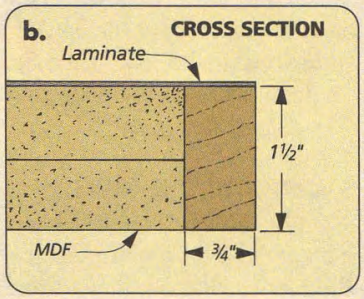

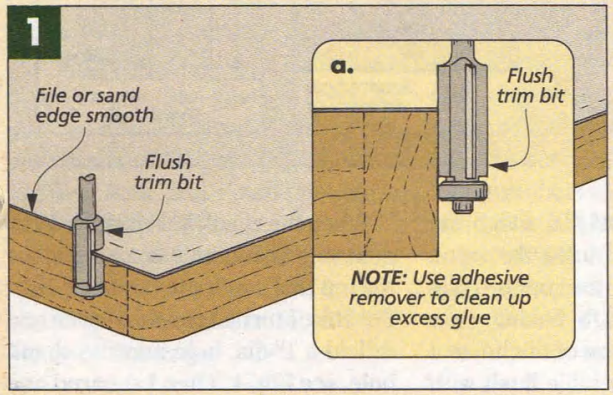

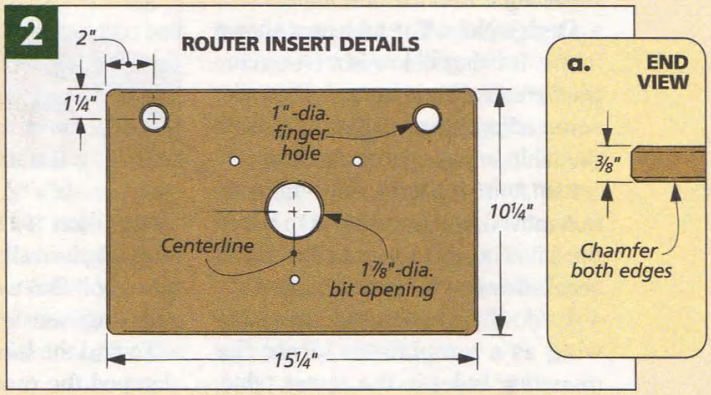

CONTACT ADHESIVE

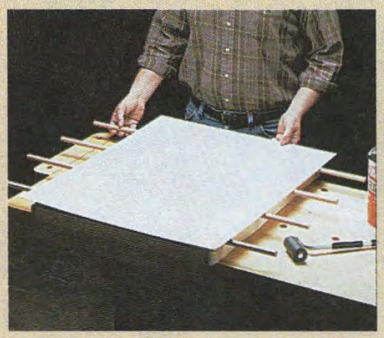

Contact adhesive will never replace regular yellow glue in my shop. But it does have its advantages. For gluing up two large surfaces (like adding the laminate to the router table), it's quick and easy to use without having to worry about clamps or messy glue squeeze-out.

To apply contact adhesive, a regular paint brush is all that's needed. I "paint" a uniform layer on one face of both pieces. Then let it dry and apply another coat. The key is to let the second coat dry completely. If the adhesive is shiny it's too wet.

Once the surfaces are dry, the pieces can be joined together. But since the adhesive grips on contact, you'll want to use spacers between the pieces so the workpiece can be adjusted as needed.

I lay dowels between the pieces to start with. Then after the workpiece is where I want it, I start removing the dowels from one end. Rolling the laminate down as you go will help give you a good bond.

After routing the opening for the insert, all that's left to add is a miter gauge slot. Then the table can be mounted to the saw.

MITER GAUGE SLOT. I cut the miter gauge slot 4" from the front edge of the table, see Fig. 3. The important thing is that the miter gauge doesn't run into the bit when you're routing. The width of the slot should match your miter gauge bar (mine was 3/4"), and the depth should be a hair deeper than the thickness of the bar.

Cutting the slot is easy. I cut mine with a dado blade on the table saw, see Figs. 3 and 3a.

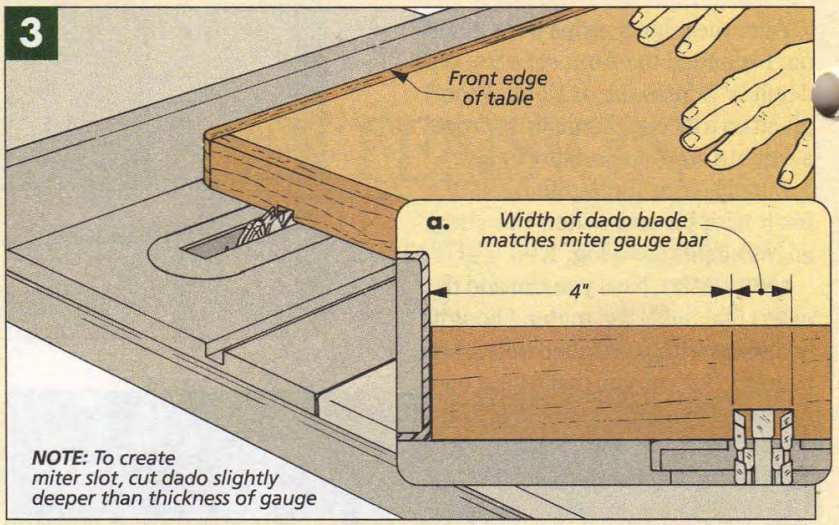

MOUNTING THE TABLE

Once the slot is cut, the table is ready to be mounted. This requires removing the metal wing from the saw and replacing it with the new table.

Design Note: The table saw shown in the drawing below is a Delta contractor's saw. You may need to make some adjustments when mounting the table to your particular saw.

PILOT HOLES FOR TABLE. After the wing is removed, the first step is to locate the pilot holes to mount the table, see drawing and detail 'a' below.

To do this, I used the extension wing as a template to locate the mounting holes in the router table. Then I drilled the pilot holes for the lag screws, see detail 'a' below.

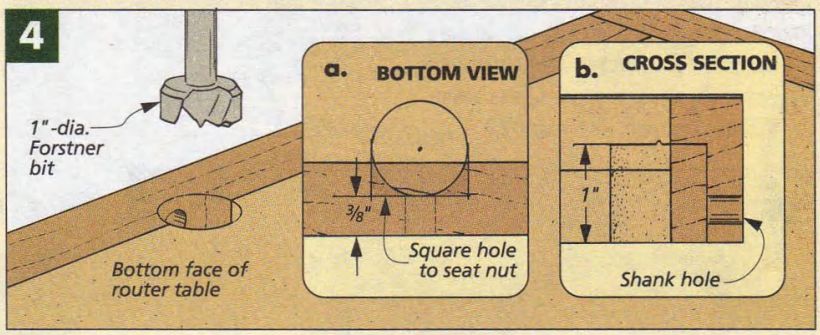

PILOT HOLES FOR RAILS. To attach the table to the rails, I used the same fence bolt that was used on the original wing, see detail 'b' below.

To find the location of the holes, I clamped the router table flush with the top of the table saw and used a brad point bit to mark the holes.

When the shank hole is drilled, the next step is to create an opening for the nut that screws to the fence bolt. For this, I turned the table over and drilled a 1"-dia. hole into the shank hole, see Fig. 4. Then I squared one end with a chisel so the nut has a flat edge to tighten against, see Fig. 4a.

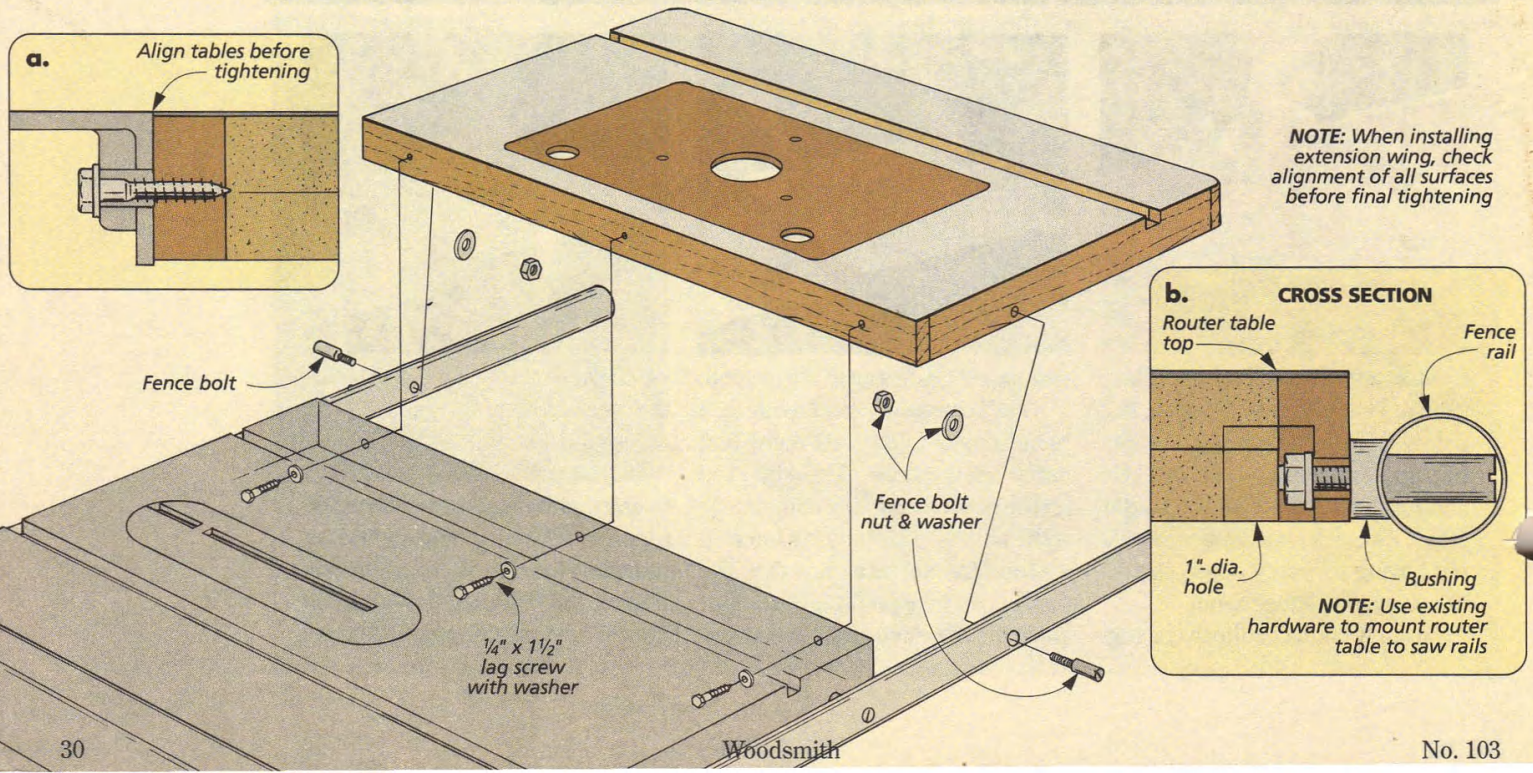

ROUTER FENCE

Now that the table is complete, it's time to add the fence. This fence is just a long hollow box made out of $^3/_4$" MDF and $^1/_4$" hardboard. It's hollow for a few reasons. First, it allows you to attach a vacuum or dust collector hose to the fence so you can remove the chips. Second, it provides an opening to "bury" the router bit. And finally, the space inside the fence can be used for bit storage.

One nice thing about this fence is that it's easy to adjust and lock down. That's because the table saw's rip fence does all the work. The router fence is screwed to the rip fence with a couple studded knobs.

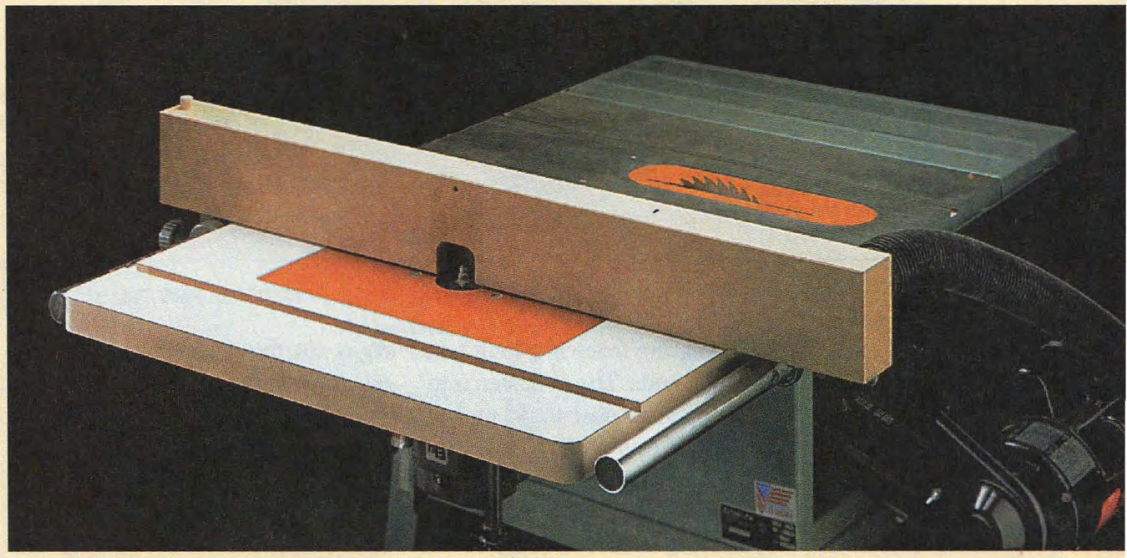

FENCE SIDES. To build the fence, the first step is to determine its length, see drawing. You want the router fence longer than your rip fence so you can attach a vacuum to the back side, see photo at right. (My rip fence is $33^1/_2$" long, and I made my fence $4^1/_2$" longer — 38".)

FENCE TOP & BOTTOM. When the sides of the fence have been cut to size, the next step is to cut the top and bottom, see drawing.

To join the sides to the top and bottom (and also to hold the ends later), I cut shallow rabbets around the top, bottom, and ends of the side pieces, see drawing and detail 'a' below. These rabbets are $^1/_2$" wide and deep enough to hold the $^1/_4$" hardboard.

VACUUM HOLE. Now, before gluing up the fence, cut a dust collection hole near the end of one of the side pieces, see details 'a' and 'b' below. Just size the hole to match the hose on your vacuum or dust collector.

I sanded and chamfered this hole. Then glued the fence together.

ENDS. To complete the basic box of the fence, I cut a piece of $^1/_4$" hardboard to fit in the end next to the dust collection hole and glued it in place. The other end is left open for now. It'll be closed later when the bit storage tray is added.

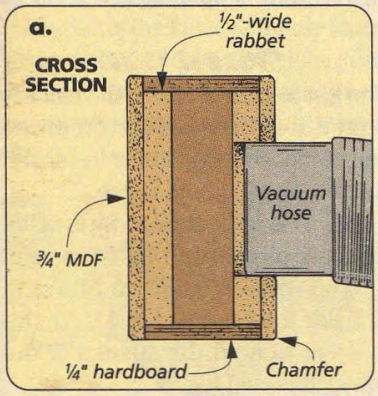

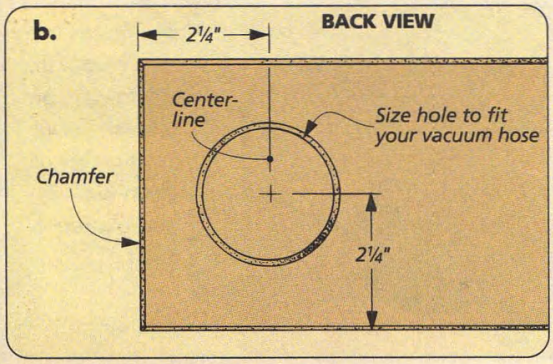

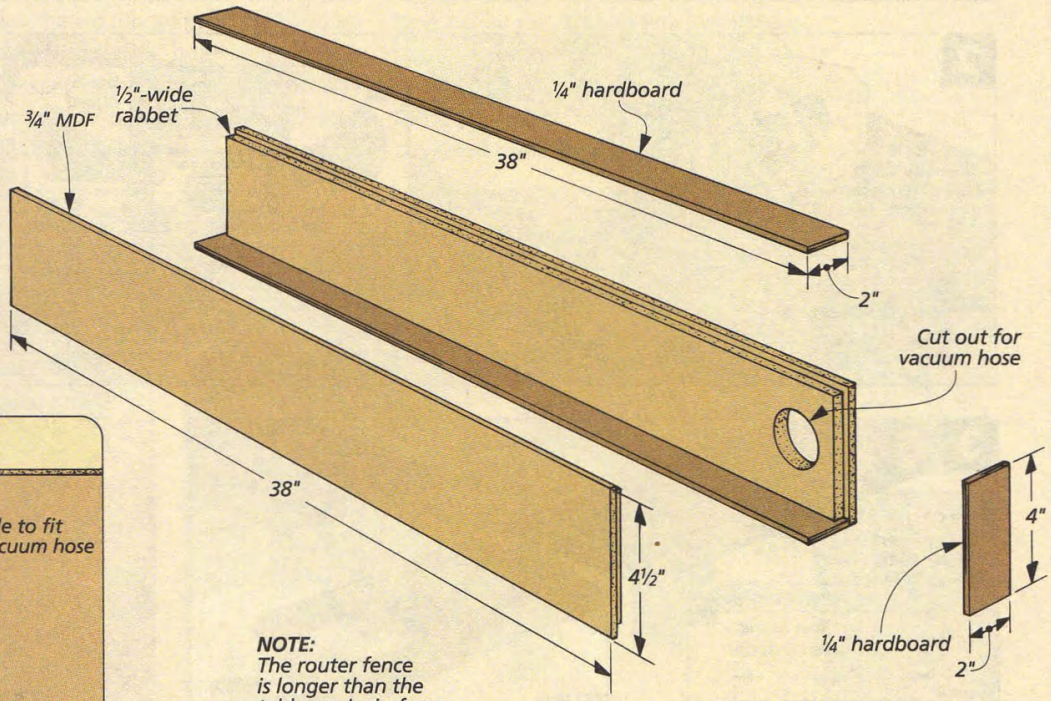

NOTE: The router fence is longer than the table saw's rip fence to allow for the dust collection hookup.

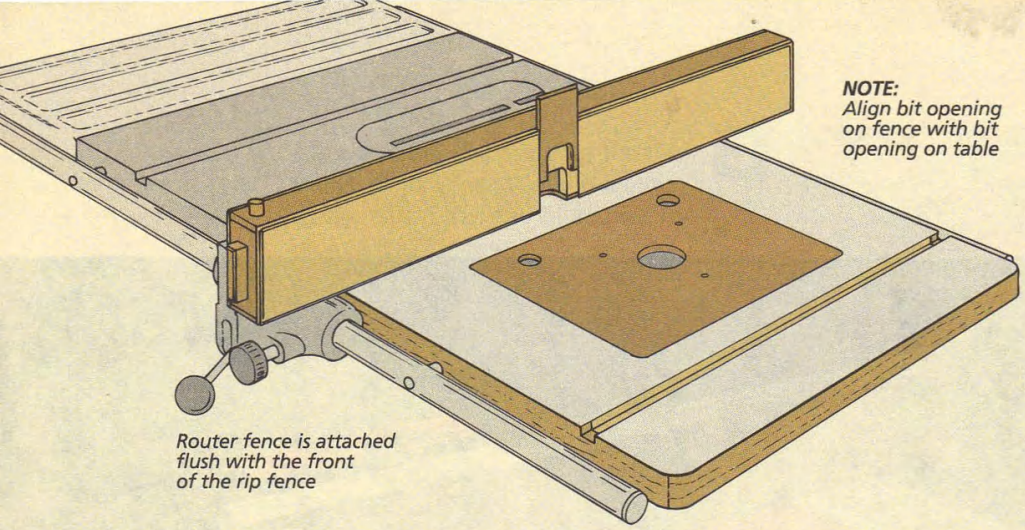

At this point, the fence is a long box open at both ends. The next step is to create an opening near the center of the fence for a router bit.

BIT OPENING

When making the bit opening in the fence, the important thing is that it aligns with the bit opening in the insert, see drawing above. What's unusual is the fence isn't centered over the table. It's offset so a shop vacuum can be hooked to the back.

To create this bit opening, start by drilling four 1"-dia. holes. This establishes the corners, see Fig. 1. Now with a hand saw cut a kerf between these holes and remove the waste with a chisel. Then you can sand the opening smooth.

REMOVABLE INSERT. After the opening was cut, I added a replaceable insert system. Actually, I made several inserts. One was cut to match the opening in the fence. And others were made with zero-clearance openings, see photo below.

The removable inserts are pieces of hardboard with beveled sides. To hold them in the front face of the fence, I cut a wide, dovetailed dado.

To cut the dado, I used a 1/2" dovetail bit in my hand-held router, see Fig. 2. Then to guide the router, clamp boards to the fence on either side of the opening. The width of the dado isn't critical (mine was 3"), but the depth is. It has to match the thickness of 1/4" hardboard, see Fig. 2a.

With the dado routed, I made several inserts. To do this, start with an extra-long blank and bevel the sides on the table saw. Just tilt the blade so the bevel on the insert matches the bevel on the dado, see Fig. 3. When the blank slides into the dado, you can cut the inserts to length and shape their bit openings.

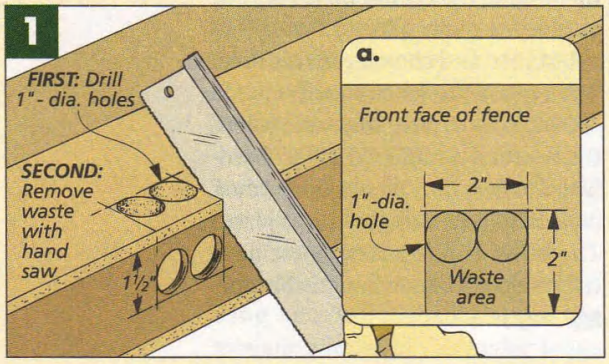

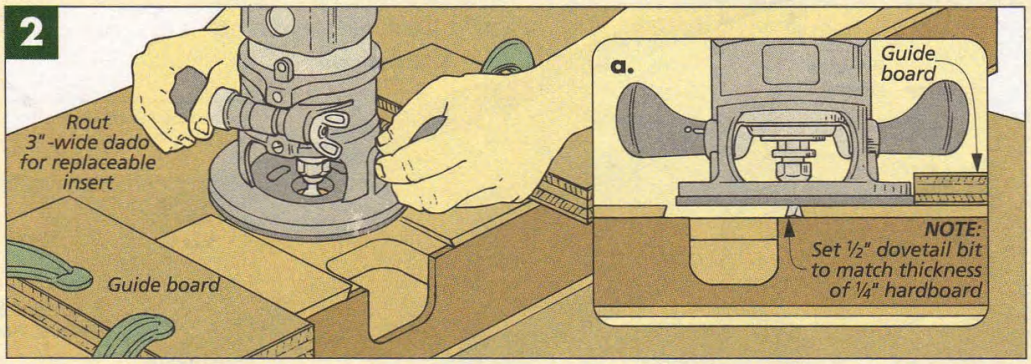

STORAGE TRAY

The last feature to add to the fence is a tray that slides in and out of the open end of the fence and holds 1/4" shank router bits, see photo above.

BASE. The base of this tray is made up of two pieces of MDF that are laminated together. Simply cut them to fit inside the fence and drill 1/4" holes in them to hold the shanks of the router bits, see Fig. 4.

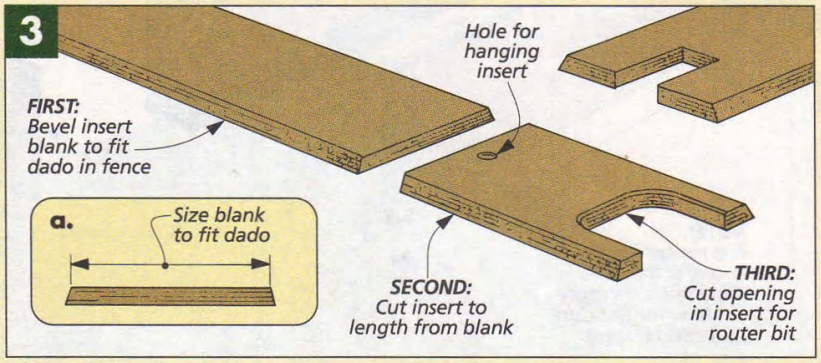

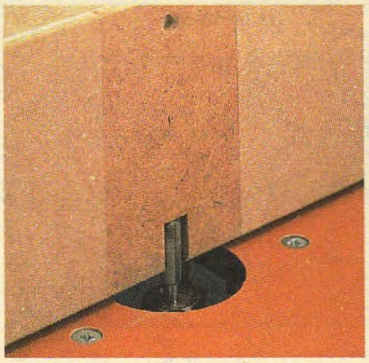

◄ *The inserts in this router fence are replaceable. So you can create any number of them, like this zero-clearance insert.*

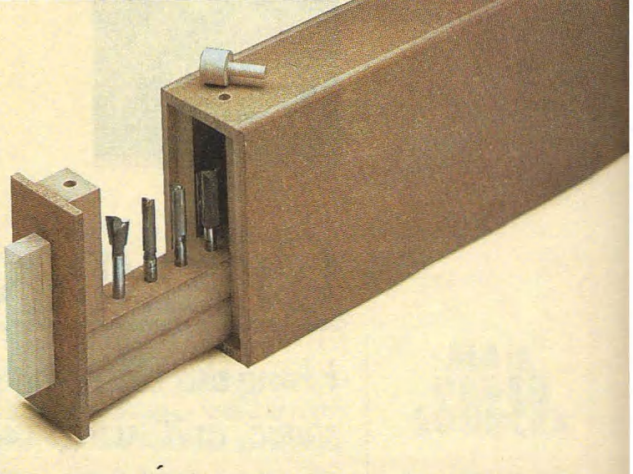

ENDS. The two ends of the tray are made of hardboard, see Fig. 4. The outside piece fits into the rabbets on the end of the fence, see photo. To support this piece, I glued on a small scrap of MDF. And to open and close the tray, I added a wood pull.

The end piece on the inside of the tray is cut to fit the opening in the fence. This way, the tray won't drop as it's pulled open. And it acts as a stop when the locking pin is added next.

LOCKING PIN. To complete the tray, I added a locking pin, see Fig. 4a. This keeps the tray from opening on its own and acts as a stop to prevent you from pulling the tray all the way out.

The locking pin is made from two different size dowels. Just drill a hole in a 5/8"-dia. dowel and glue a piece of 1/4" dowel into it. Then to hold the pin, drill a hole through the top of the fence and into the vertical MDF piece on the tray, see Fig. 4a. When the locking pin is in place, both the tray and fence will be complete.

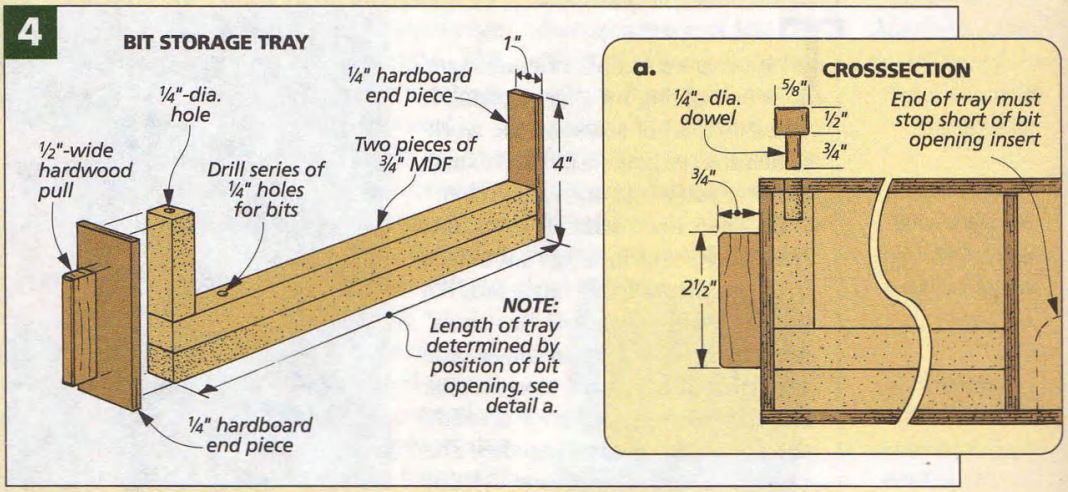

MOUNTING THE FENCE

Now the router fence can be mounted to the saw's rip fence. But first, I chamfered all the edges to soften the sharp corners, see the photo above.

Mounting the fence to the rip fence is easy. I used two studded knobs. (For sources, see page 35.) These screw into threaded inserts added to the back of the router fence, see Fig. 6.

To locate the inserts, I clamped the fence to my rip fence so they were flush along the bottom, see Figs. 5 and 5a. Then to mark the location for the holes, I used a brad point bit that just fit through the 1/4" holes in my fence.

Design Note: If your fence doesn't have any pre-existing holes, you'll need to drill a couple first.

When you've marked the fence, the holes for the threaded inserts can be drilled, see Fig. 6. Just remember that the inserts will require holes that are larger than the drill bit you just used to locate them.

Now that the inserts are in place, the fence can be easily mounted and removed from the rip fence. ❑

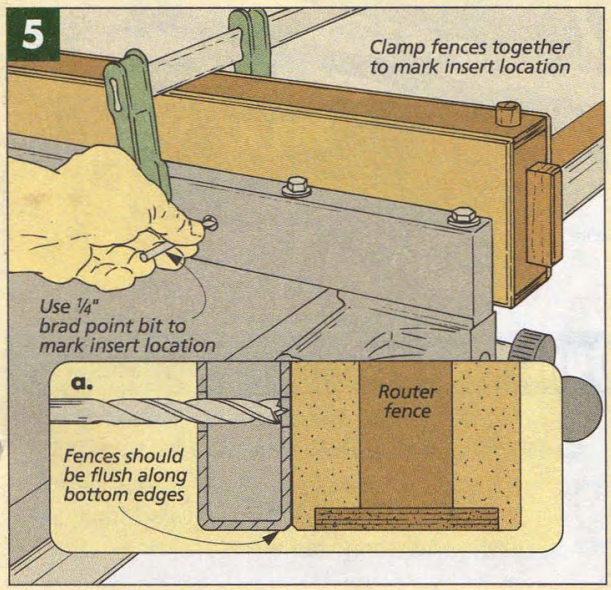

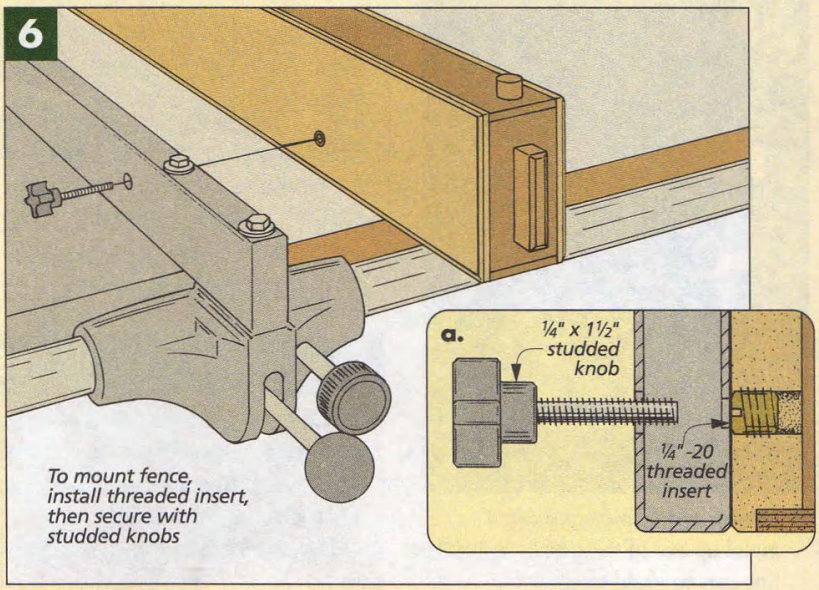

CLAMPING STATION

Using this clamping station to glue up panels frees up valuable workbench space, and swings out of the way when your done.

There are a couple of challenges when gluing up a large panel. It takes up a lot of space on the workbench and the panel is difficult to handle after you've clamped it together.

So when **Fred Ritz** of Scottsville, New York, sent in a jig that solves both problems, I was intrigued. It's constructed with "off-the-shelf" plumbing supplies and black pipe (available at hardware stores). Just like the Erector set I grew up with, the pieces simply screw together. The only thing you add are a few 3/4" pipe clamps from your shop, see photo.

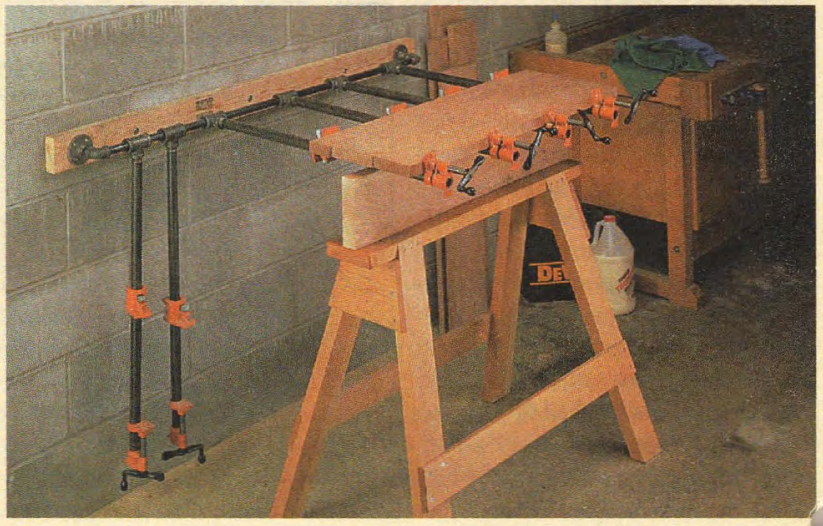

ASSEMBLY. The station consists of 3/4" plumbing tees that slip over a piece of 1/2"-dia. black pipe, see Fig. 1. Added to both ends are an elbow, a nipple, and a threaded flange. The nipple and elbow hold the jig away from the wall. And the flange lets you attach it to a wall-mounted 2x4.

MOUNTING. The station could be mounted at almost any height. But I positioned mine so the pipe clamps hung straight down when not in use. (It was 36" above the floor.)

USING THE STATION. To use the station, swing the clamps to a horizontal position so the boards lay flat during assembly, see photo above. Note: I set a board on top of a sawhorse to support the clamps. ❑

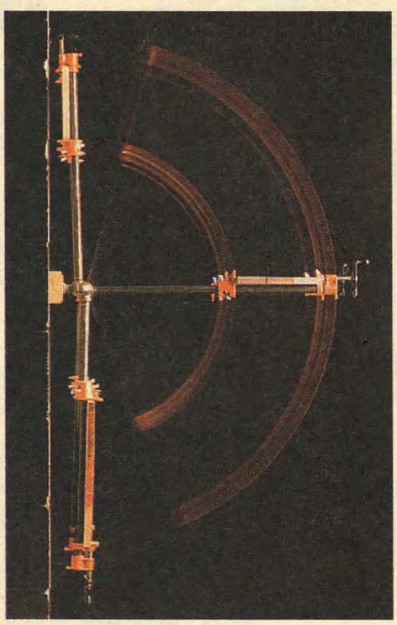

▲ ***Double duty.*** *You can swing one panel up out of the way so a second one can be glued together.*

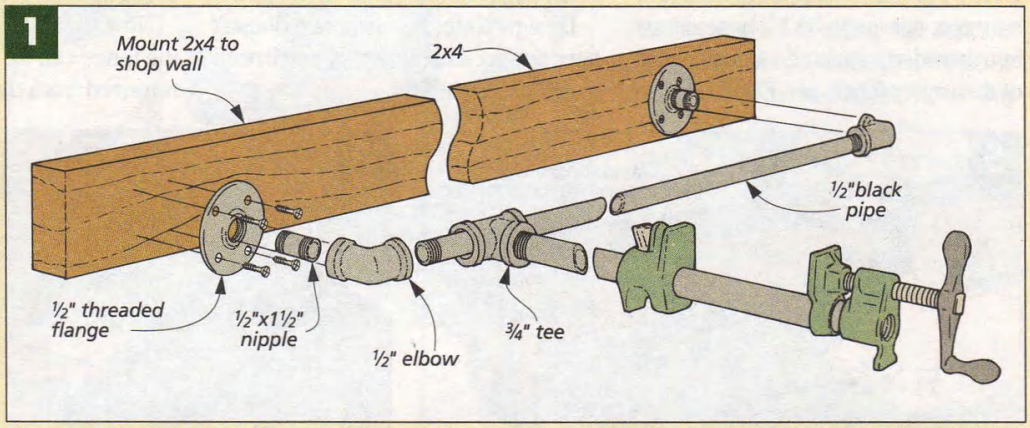

FEATURE YOUR JIG

If you've built an *original* jig and would like to see it featured on this page, send your idea to *Woodsmith*, Reader's Jig, 2200 Grand Avenue, Des Moines, Iowa 50312.

If we publish it, we will send you $100 and a full set of *Woodsmith* back issues, with binders. (This set retails for over $300.) Include a sketch (or photo) of your jig and explain how it's used. Also, *please* include a daytime phone number.

SOURCES

Woodsmith Project Supplies offers hardware kits and supplies for some of the projects shown in this issue. Supplies for these projects are also available at your local hardware store or through some of the mail order sources at right.

MDF

To build the router table on page 28, I used medium density fiberboard (MDF). MDF is similar to tempered hardboard but comes in thicker sizes. It's also dense and

heavy, which is great for dampening vibrations in a router table. (On the down side, if you build a large project out of MDF, it can be difficult to handle.)

Like other man-made wood products, MDF is much more stable than solid wood. Plus, it's made up of very fine particles, so you can cut or rout clean dadoes and grooves in it, see photo. You can also rout a profile on the edges.

MDF used to be hard to find, but it's more readily available now. You should be able to buy it through your local lumberyard.

ROUTER TABLE

The router table, shown on page 28, replaces the extension wing on your table saw. The insert and the hardware needed to build the project are available from *Woodsmith Project Supplies*. The kit includes:

(1) Phenolic Router Insert ($3/8$" x $10\frac{1}{4}$" - $15\frac{1}{2}$")
(3) $1/4$" x $1\frac{1}{2}$" Lag Screws
(5) $1/4$" Flat Washers
(2) $1/4$" x $1\frac{1}{2}$" Star Knobs
(2) $1/4$"-20 Threaded Inserts
W103-7103-100 Router Table Hardware Kit.....$27.95

This or similar hardware is available from local hardware stores as well as the catalogs listed at right.

ROUTER BITS. To build the router table, you'll need a pattern bit and a flush trim bit for your router. These bits do basically the same thing: trim an edge flush with another finished edge or with a template. The only difference is where the bearing is located.

On a flush trim bit, the bearing is on the end of the bit. So the finished edge is positioned *below* the edge that gets trimmed, refer to Fig. 1 on page 29.

On a pattern bit, the bearing is located next to the shank, so the template is positioned *above* the edge that gets trimmed, refer to the box on page 19.

Woodsmith Project Supplies is currently offering both router bits.

W103-1514-886 Flush Trim Bit ($1/4$" Shank).....$24.95
W103-1514-161 Pattern Bit ($1/4$" Shank).....$31.95

FRETWORK

If you have a scroll saw and would like to do some fretwork projects, most of the supplies mentioned in the article can be found locally or through the woodworking catalogs listed at right.

The file I use to clean up the fretwork is a fine-grit, half-round diamond needle file that's made by Eze Lap (#604F). The half-round side will smooth inside curves, and the flat side works on both outside curves and straight edges. This file is available from the source listed at right.

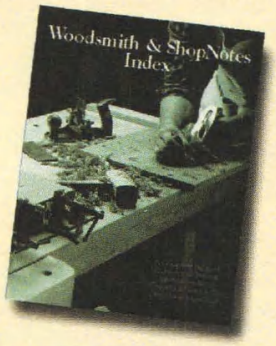

INDEX

We've recently updated our index of woodworking projects and information. It includes issues 1-100 of *Woodsmith* and issues 1-23 of *ShopNotes*. (Note: There's no shipping & handling charge for the index.)

W103-8001-500 *Woodsmith* Index.....$4.95

WOODSMITH PROJECT SUPPLIES

To order a hardware kit from *Woodsmith Project Supplies* or for a copy of our *WoodsmithShop* catalog, use our Toll Free order line. It's open Monday through Friday, from 7 AM to 7 PM Central Time.

Before calling, please have your VISA, MasterCard, or Discover Card ready.

If you would like to mail your order in, call the number listed below for more information concerning shipping charges as well as any applicable sales tax.

1-800-444-7527

Note: Prices subject to change after April 1996

WoodNet™ COMPUTER BULLETIN BOARD FOR WOODWORKERS

- 40 Project Plans to Download
- Step-by-Step "How-to" Articles
- Woodworking & Finishing Forums
- Back Issue Indexes for *Woodsmith* & *ShopNotes*
- For PC or Mac
- Download FREE on First Call
- Join Hundreds of Members

To log on to WoodNet, set your communication program to 8 data bits, 1 stop bit, no parity, full duplex, and ANSI terminal emulation. Then call 1-515-245-9663. Questions? Call us at: 515-282-7000 x2173, M-F 9-5.

MAIL ORDER SOURCES

Similar project supplies and hardware may be ordered from the following companies:

Constantine's
800-223-8087
Router Table Supplies
Scroll Saw Supplies
Veneer

Woodcraft
800-225-1153
Router Table Supplies
Scroll Saw Supplies

Woodsmith Store
800-835-5084
Router Table Supplies
Scroll Saw Supplies
Diamond Files
Veneer

Woodworkers' Store
800-279-4441
Router Table Supplies
Scroll Saw Supplies
Veneer

Woodworker's Supply
800-645-9292
Router Table Supplies
Scroll Saw Supplies

FINAL DETAILS

▲ *This tambour door conceals what's stored inside. Yet it easily lifts up out of the way so you can use the desk. Plans begin on page 6.*

▲ *With the tambour door open, it reveals the slots and drawers of the organizer which help eliminate clutter. Although the organizer is sized to slide inside the roll-top desk, it can "stand alone" anywhere you need storage, see page 14.*

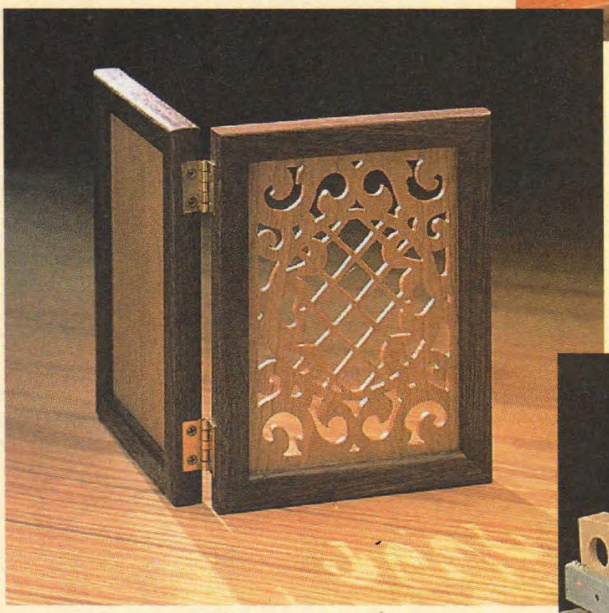

▲ *Here's a fretwork picture frame that looks just as good from the back as it does from the front. Refer to page 24 for complete plans.*

► *We replaced the extension wing on our table saw with a router table. Then we added a unique fence that attaches to the saw's rip fence. Detailed plans start on page 28.*

Master Woodworking Techniques

from the Editors of Woodsmith

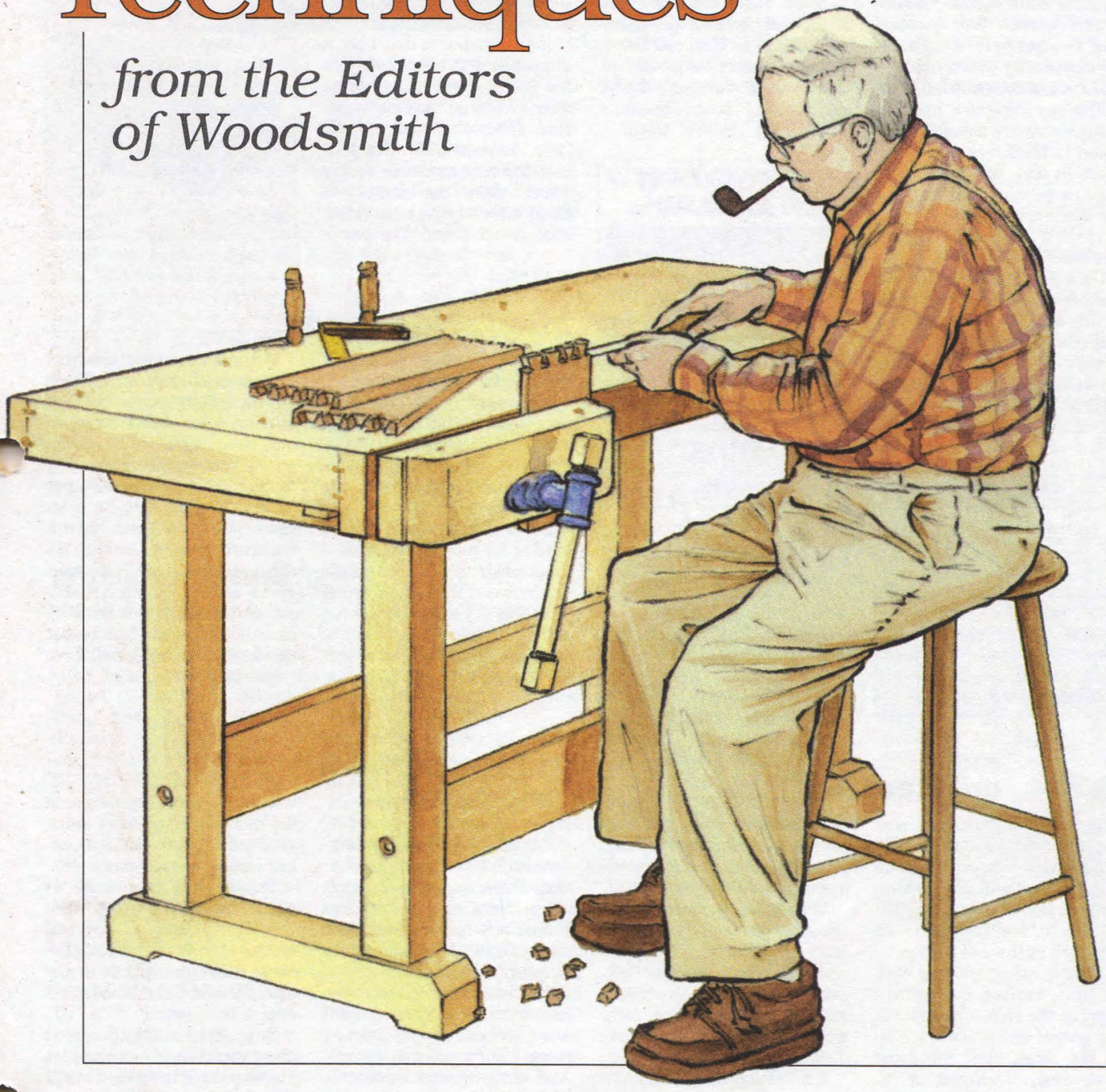

Wood • Tools • Joinery • Finishing

Copyright© 1995 Woodsmith Corporation All Rights Reserved

A Supplement to Woodsmith

Working with Wood

2x4 vs. 4/4

Q: *Why are some boards designated as 2x4 and 2x6 while others as 4/4 and 5/4?*

A: The short answer is 2x4 and 2x6 usually refer to softwoods used by carpenters in building construction. Where 4/4 and 5/4 (read "four quarter" and "five quarter") designates woods used by cabinetmakers (most often hardwoods).

The key thing to remember is softwoods are usually designated in thickness *and* width (such as 2x4, 2x6, etc.). This way, carpenters only need to cut the workpieces to length. And they can use the boards like building blocks.

On the other hand, cabinetmakers need pieces that come in all sorts of widths and lengths. So hardwoods are usually milled only to specific thicknesses, but they're left as wide as possible.

Of course a 2x4 isn't exactly 2" by 4" and 4/4 stock is less than 1" thick, see the charts below. These designations indicate how big the stock was *before* it was milled and dried.

Note: The thickness figure in the chart below is the standard set by the National Hardwood Lumber Association. Your local lumber dealer might sell a 4/4 board, for example, 3/4", 25/32", or 13/16" thick.

HARDWOOD STANDARDS

THICKNESS	
Nominal	Actual
4/4	13/16"
5/4	1 1/16"
6/4	1 5/16"
8/4	1 3/4"

SOFTWOOD STANDARDS

THICKNESS		WIDTH	
Nominal	Actual	Nominal	Actual
1" (one-by)	3/4"	2"	1 1/2"
		4"	3 1/2"
2" (two-by)	1 1/2"	6"	5 1/2"
		8"	7 1/4"
4" (four-by)	3 1/2"	10"	9 1/4"
		12"	11 1/4"

storing lumber

Q: *What's the best way to store lumber, standing on end or lying face down?*

A: Leaning wood against a wall makes it easier to sort through, but unfortunately, the wood may eventually start to "belly" towards the wall.

If the lumber is dry, I lay it down flat. But not directly on the floor, especially a concrete floor. (Wood will soak up moisture from the concrete. So keep the boards elevated.)

If the lumber needs to dry some, then the important thing is to allow air to circulate around each board. The way to do this is to lay the boards face down and "sticker" them — separate them with small scraps of wood placed every few feet, see Drawing.

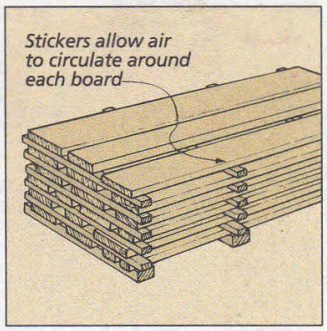

kiln vs. air-dried

Q: *Which is better, kiln-dried or air-dried lumber?*

A: In our shop we use mostly kiln-dried lumber. It's inexpensive, commonly available, and usually ready-to-use. But it's not necessarily our first choice.

I'd prefer to use air-dried lumber for a couple reasons. I think air-drying is more gentle on the wood than kiln-drying. The kiln-drying process can put the wood through a lot of stress, which is hard to detect until you try to rip a piece.

Also, I find that air-dried lumber has better color. When sitting side-by-side, kiln-dried lumber often looks "washed out" in comparison.

The problem with air-dried lumber is that it takes longer to dry. You have to be a lot more patient — and have a moisture meter to be sure it's dry enough to use. (In most parts of the country, hardwoods should be under 10% moisture content. And to get the wood this dry, it will have to be stored indoors.)

flat vs. quartersawn

Q: *How are flatsawn and quartersawn wood different?*

A: The difference has to do with the method used to slice the tree into lumber. The easiest way to "see" the difference is to look at the end grain.

Most wood is flatsawn. With flatsawn lumber, the growth rings on the ends of the boards are arched and almost parallel to the faces. And the faces have oval, U-shaped or V-shaped markings.

Flatsawn wood is common. It's the easiest way to cut the logs, and there's less waste. But the boards are much more prone to cupping and also expand and contract about twice as much as quartersawn wood.

With quartersawn wood, the growth rings on the ends are perpendicular to the faces, and the face grain is straight and parallel. These boards are much more stable. Plus, some woods, like oak, may have decorative ray flecks.

But cutting a log into quartersawn lumber leaves a lot more waste than flatsawn, so it's generally harder to find and more expensive.

waiting to work

Q: *Is it okay to start working on a project as soon as I get the wood home from the lumberyard?*

A: I'm always eager to get started on a project as soon as I can. But really, it's best to let the wood sit in the shop for a couple of weeks.

Just because wood has been kiln-dried doesn't mean that it won't expand or contract any more. Wood always moves. And after a piece leaves the kiln, there are a lot of chances for it to move some more.

It's likely to sit in a warehouse for part of its life (and warehouses are never very dry). Then it's loaded on a truck, then stacked at the lumberyard or retail store.

But even if you were to move the wood directly from the kiln to your shop, you'd still want to let it sit. That's because the shop might be so dry that the kiln-dried wood dries even a little more.

So plan ahead. Buy the wood a few weeks in advance and let it sit in your shop to see if it will shrink or warp. This way you can cut out any problem areas — before you build them into your project.

reaction wood

Q: *When I am ripping a board, sometimes the kerf will either close up pinching the back of the blade or open up like a wishbone. Why is this?*

A: There are a couple reasons why a board will pinch or open up. One has to do with the tree the wood came from. The other with how the wood was dried. In both cases, there was stress or tension *inside* the wood.

The wood you cut may have been "reaction wood" — wood that's been cut from a leaning tree. The tree has to adjust or react to the gravity trying to pull it down. So it develops special cells that can withstand this extra stress.

When you rip a piece of reaction wood, you're cutting through these cells and the stress in the cells is released. The wood either pinches the blade or opens up wide.

CASE HARDENING

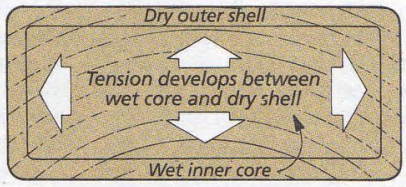

But reaction wood isn't the only explanation. It can also happen with kiln-dried lumber if the boards haven't been properly dried.

The wood has to be dried under special conditions. This ensures that the outside of the wood and the inner core have the same moisture content.

If the wood isn't dried properly, then the outside will dry faster than the inside and create a dry outer shell around a wet inner core. (This is called "case hardening," see Drawing.) By ripping through this board, you're releasing the tension between the shell and core, so the kerf pinches shut or spreads open.

figured woods

Q: *I've always liked the look of figured woods like spalted maple and walnut burl. What are they?*

A: Spalted wood is the result of a fungi attack. It may be as hard as normal, or it can be soft or "punky" depending on how bad the rot is. The wood has tiny black lines that look like someone's scrawled a map on it with India ink.

A burl is an irregular bulge that grows on the trunk of a tree. It looks like a tumor or a cancerous growth. The grain in a burl is beautiful — very irregular with a lot of bud formations. This makes the wood highly prized even though it's hard to work. Burls are used mostly for veneers.

choosing wood

Q: *How does the choice of wood (oak, cherry, pine) affect the way a project looks?*

A: Mahogany, walnut, and cherry are good choices for "formal" projects, like a highboy or a grandfather clock. On the other hand, pine and oak are usually favored for "country" projects like pie safes.

The main reason for this doesn't have much to do with the woods themselves. It's just that historically, we're used to "seeing" them this way.

But there's another reason. The size of the pores and the grain pattern also play a role in determining whether a project looks formal or informal. Woods with a strong grain pattern, like oak and ash, seem less formal. Woods with more subtle grain patterns, such as cherry and mahogany, make a project seem more polished.

softwood gradings

Q: *How are softwoods, like pine and fir, graded?*

A: Grades of softwoods are a lot more complicated than grades of hardwood. For one thing, there are four major associations of pine manufacturers. And each has its own set of grading rules. Plus, there are at least twelve species of pine commonly available (not to mention the spruces and firs, as well as redwood).

When you buy softwood lumber for building furniture or small projects, you'll probably want to avoid "structural" or "construction" grade boards. This includes the "two-by" (1½" actual) and thicker wood used in construction.

Instead, you'll want to use "yard lumber." Of course, it's not quite that easy. There are two types of yard lumber that are usually available: select and common.

Select lumber has few knots or defects. It's graded "A" (the best) through "D" (the lowest select grade). There are also combinations such as "C and Better" (C&BTR).

Common lumber will have a few more knots and defects. It's graded No. 1 (the best) through No. 5 (the worst).

So how do you go about choosing lumber? Luckily, when you get right down to it, buying softwoods isn't as complicated as the grading systems make it sound at first.

Lumberyards don't stock every grade. Typically, they'll carry only one select grade and a couple common grades.

Shop Tip: Instead of select, try buying common instead. You'll need more wood so you can cut away the defects, but you may end up paying less.

plywood substitute

Q: *What is MDF?*

A: MDF is an engineered wood product. (It stands for Medium-Density Fiberboard.) It's a sheet good made with a wood fiber material similar to sawdust, not wood chunks and shavings like particleboard. This allows the material to be compressed much tighter, so MDF ends up being stronger, heavier, and smoother than particleboard. It's a good base for veneer or plastic laminate. You can even rout a clean profile along its edge and prime and paint it.

Like plywood, MDF is very stable. But it costs about half as much as cabinet grade plywood.

MDF is gaining in popularity, but it's not available everywhere just yet. To find the dealer nearest you, call the National Particleboard Association (301-670-0604).

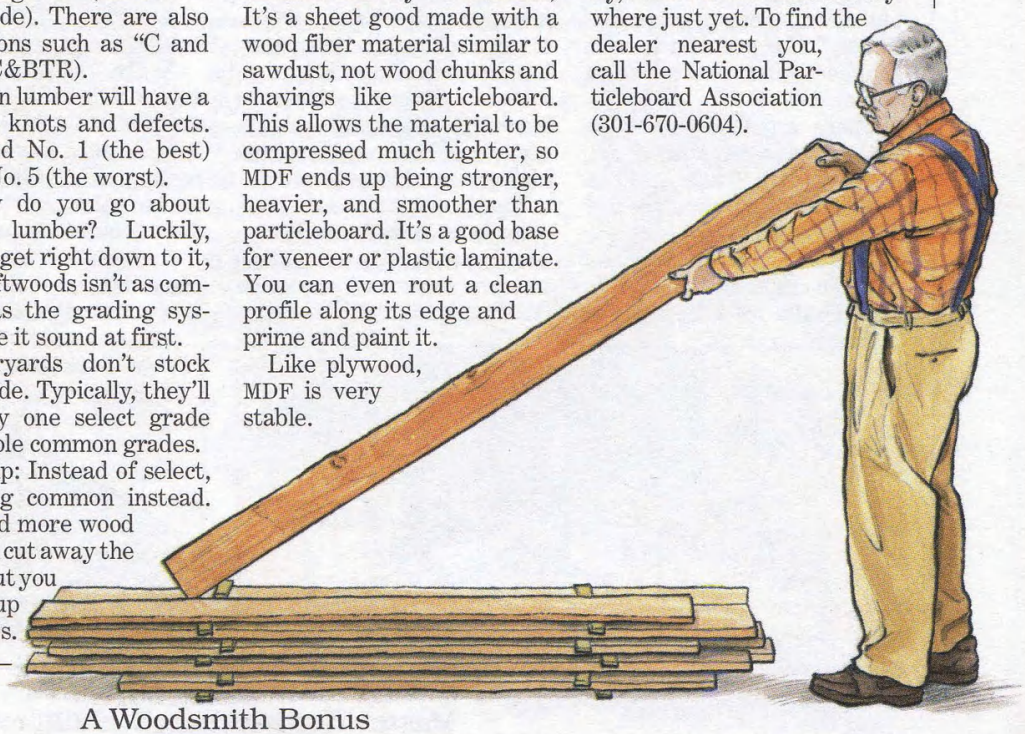

Power & Hand Tools

resawing

Q: *Do you recommend resawing on the table saw?*

A: Resawing is cutting a thick workpiece into two (or more) thinner pieces. The best tool for this is *always* the band saw. It cuts through wider stock with a thinner kerf and less waste. Plus, it's the safest tool to use. But a table saw can also work in a pinch — if the board isn't too wide.

The problem with a table saw is the blade can only be raised a few inches high. If the workpiece is wider than the height of the blade, you'll have to make the cut in two passes. This can be hard to manage. There's no easy way to protect your hands and support both halves of the workpiece.

If you do decide to resaw on the table saw, make sure you follow a few precautions.

Use a sharp rip or combination blade, see Drawing. To keep the piece tight against the fence, use a featherboard in front of the blade. Plus, I use a shop-built zero-clearance insert with a splitter.

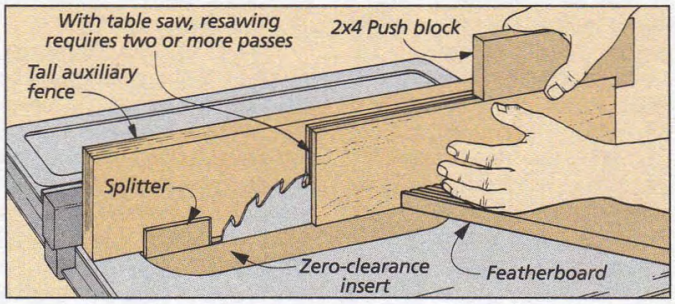

rust build-up

Q: *What do you do to prevent rust from building up on machine surfaces?*

A: For years, I've used ordinary paste wax. Paste wax is inexpensive and easy to apply. Just wipe on a thin layer with 0000 steel wool. Then let it dry and buff it out to a hard film with a soft rag.

Not only does this prevent rust, it also helps the workpiece slide across the surface of the machine easier.

creeping router bits

Q: *Why do bits loosen up when I'm routing?*

A: I've had router bits slip before, especially when routing dovetails. With dovetails, all the waste has to be hogged out in one pass.

A bit might slip if it's inserted too far into the collet. Here the collet grabs the fillet, not the shank, see Drawing.

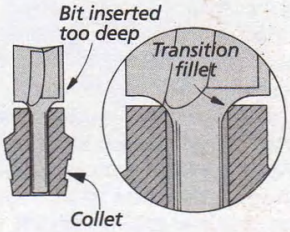

If you use the router in a router table, another possible cause may be sawdust in the bottom of the collet. Sawdust can prevent the collet from squeezing the bit tightly. Simply remove the collet and blow out the sawdust.

Shop Note: While you have the collet removed, look it over. Collets do wear out and need replacing occasionally.

But the collet isn't always the problem. Sometimes it's the bit. A bit can be dirty or oily and need some cleaning.

Or the shank of the bit may have a burr on it, so the collet can't get a good hold. If there is a burr, a light sanding is all it takes to remove it.

preventing snipe

Q: *Why does my thickness planer make a deeper cut at the ends of a workpiece?*

A: A planer will often cut a little deeper at the beginning and end of a board — it's called "snipe." The problem is with the feed rollers and the short planer bed.

There are feed rollers on both sides of the cutterhead, see Drawing. These hold the workpiece flat against the bed of the planer.

But at the beginning and end of a cut, only one roller is holding the piece. And for a short moment, the board can tip up into the knives.

The solution is to add more support. One way to do this is to give the board a little lift as it enters and exits the planer. Using a roller stand or extending the bed will also help.

Note: If your thickness planer has adjustable bed rollers, the rollers may be set too high and need to be lowered.

Another thing that helps is to leave an extra few inches on boards you need to plane. This way you can cut off any snipe that may occur.

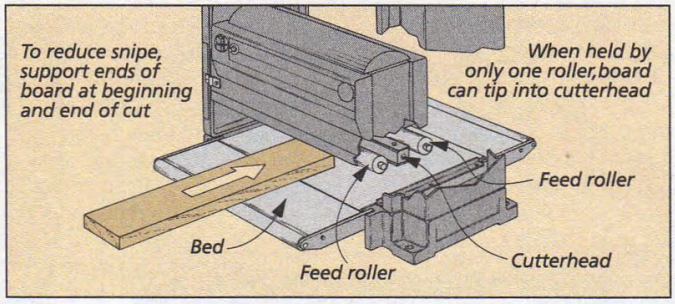

pull vs. push

Q: *What makes a Japanese handsaw different?*

A: The big difference with Japanese saws is they cut on the pull stroke, see Drawing.

A western saw cuts on the push stroke. So the blade has to be thick and stiff so it doesn't buckle as you push it.

A Japanese saw blade is much thinner. Pulling the saw keeps it straight and in line.

The first time I used a Japanese saw, I couldn't believe how easy and smooth it cut.

If you're thinking of trying a Japanese saw for yourself, I'd suggest starting with a backsaw called a dozuki (DOZE-ou-key). But try to find one with a replaceable blade. It's easy to bend a blade or break the fine teeth when you're first getting used to the saw.

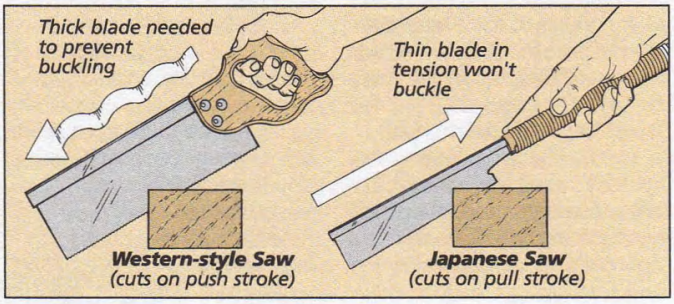

kickback

Q: *The manual that came with my table saw says that when you're crosscutting, you should never use the rip fence and the miter gauge at the same time. Why is this?*

A: If you use the rip fence as a stop when crosscutting with the miter gauge, you're asking for trouble. When the cut is complete, the cut-off piece will be trapped between the fence and the blade and will probably kick back at you.

But this doesn't mean you can't ever use both the rip fence and the miter gauge at the same time. I do it all the time — when I'm *not* cutting all the way through a board.

So when cutting rabbets, dadoes, and tenons, I use the rip fence as a stop, see Drawing. The board stays in one piece, and there's no kickback.

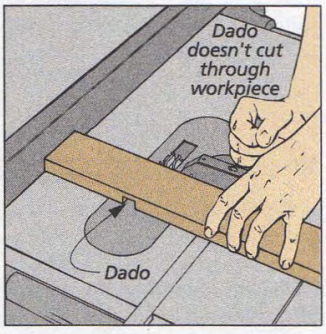

removing warp

Q: *I've tried to remove warp by running boards through my thickness planer, but it doesn't really work. How can I get boards truly flat?*

A: A planer isn't designed to flatten a board, it makes the faces parallel, see Drawing. The first step is to get one face flat. Then the planer will take care of the other face.

There are two ways to get the face of a board flat. Using a hand plane is the traditional method. But an easier way is to use a jointer.

Many woodworkers think a jointer is just for cleaning and squaring the edge of a board. Actually, it's much more versatile. It will square an edge, cut a rabbet, or taper a leg. But one of its most important functions is to flatten the face of a board. In our shop, it does much of the grunt work when preparing straight, flat stock.

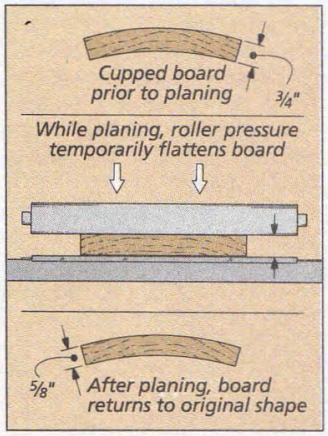

router chipout

Q: *I often get chipout when using a router. Is there any way to prevent this?*

A: The best thing to do is keep your bits sharp. A dull bit is much more likely to cause chipout than a sharp one.

But there are a few other precautions you can take.

Routing across the end of a board almost always results in chipout at the end of the cut. But this can be easily avoided. To do this, I put a block behind the workpiece to support the wood fibers, see Drawing.

Or if you're routing around all four edges, start by routing the ends first. Then when you rout the sides, any chipout will be cleaned up.

Also, instead of taking one deep pass, take a number of shallow passes and feed the router a little slower (or workpiece if you're using a router table). This will reduce the amount of wood the bit has to cut with each rotation.

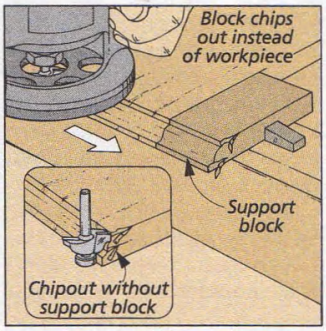

water vs. oil

Q: *What type of sharpening stones do you use in the Woodsmith Shop?*

A: We prefer waterstones for sharpening chisels and plane irons. They don't take long to learn how to use, and they have some advantages over oilstones.

First, waterstones come in finer grits than oilstones. We use combination waterstones. One side is 1000-grit. The other side is 6000-grit. So you can get an incredibly smooth (and sharp) cutting edge.

Waterstones also cut very fast. The abrasive particles steadily give way so there's always a fresh surface. On the other hand, the surface on an oilstone can glaze over after just a little sharpening.

Finally, since waterstones work with water, the clean up is much easier.

Of course waterstones have their disadvantages too. They require flattening more often than other stones. But fortunately, this is easy to do. I use a piece of drywall screen attached to a flat surface.

plane choices

Q: *What's the first hand plane I should buy?*

A: I would suggest starting off with a block plane — I would be lost without mine. It will often complete a little job in the same time it takes to set up a power tool.

A block plane is especially useful for finish work. It can trim the edging on plywood, smooth joints prior to gluing, chamfer an edge, remove saw marks along the edge of a board, and trim a miter to fit perfectly. All this from a tool that fits in your shop apron.

I prefer a low-angle block plane over the standard type. But regardless of which you choose, don't scrimp. Make sure the plane is well-made and that the opening in the throat is adjustable.

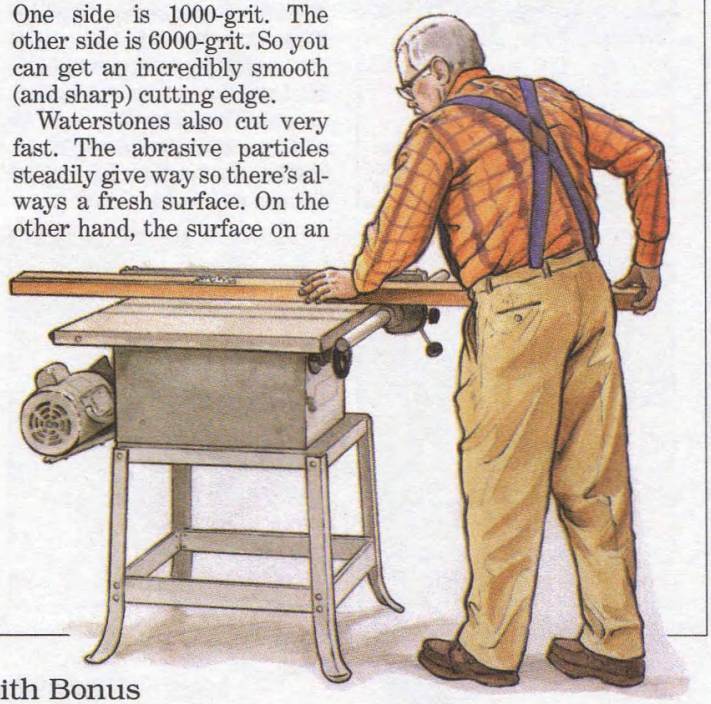

Joinery Techniques

beveled miters

Q: *Sometimes a beveled miter joint doesn't close completely, or it opens up after the project's been assembled. Is there any way to fix this?*

A: Miters can be one of the trickiest joints to work with. The trouble is it's easy to be off just a bit when cutting a miter. Or if the miter *is* cut right, there can still be a gap at the corner if the frame isn't assembled square.

Here's a tip for closing up a gap — as long as the mitered pieces fit together fairly well to begin with. I burnish (roll over) the tips with the shank of a screwdriver or nail set, see Drawing. This way, the miters don't have to be re-cut.

But if the miters are too far out of alignment, there's not much choice but to "break" the joint and start over.

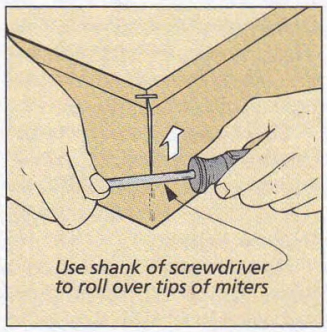

table tops

Q: *What's the best method for securing a solid wood table top to a frame?*

A: There really isn't a "best method" for joining a table top to its frame. The important thing is that a *solid wood* top must be allowed to expand and contract. So you don't ever want to glue it down — it has to be able to move.

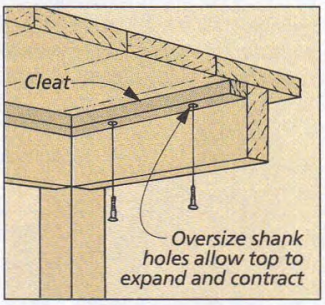

One simple solution is to use screws. All you do is screw up through the frame or through hardwood cleats that have been attached to the frame, see first Drawing. Just make sure the shank holes are oversize so the top can move.

Another "no cost" solution is to use L-shaped blocks. Each block is like a small hand with a finger that fits into a groove cut on the inside of the frame, see second Drawing.

But my choice is a metal "figure 8" fastener, see third Drawing. One side is screwed into a shallow mortise on top of the frame. The other is screwed into the table top. As the top expands and contracts, the fastener will pivot to allow for the movement.

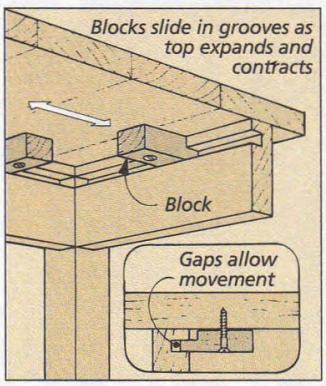

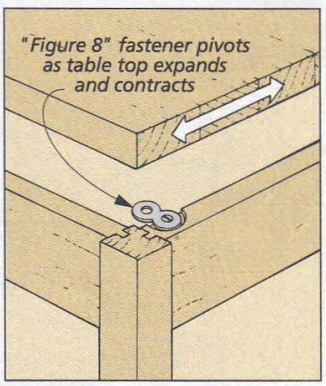

strong panels

Q: *Which is best for strong edge-glued panels — dowels, splines, or biscuits?*

A: A good edge-glued panel doesn't need dowels, splines, or biscuits. It's already strong enough. That's *if* the edges are jointed clean and square and it's been glued and clamped right. After all, glues these days are much stronger than they used to be. They're stronger than the wood itself.

Having said that, I do use splines or biscuits on occasion. They can keep boards aligned so they won't slide out of position when clamped.

woodworking glue

Q: *What type of glue is best for woodworking?*

A: No single glue works in every woodworking situation. For a waterproof glue, I'll use epoxy. For applying veneer, contact cement usually works best. And when repairing antiques, I use hide glue.

But the glue that I use to build most furniture projects is yellow woodworking glue (an aliphatic polyvinyl acetate or PVA). Franklin's Titebond and Elmer's Carpenter's Glue are two common brands.

Yellow glues are easy to use, strong, and inexpensive. And best of all, they dry fast. Clamps can be removed after about a half hour. (The glue will be cured to full strength after 24 hours.)

Of course, this can also be a disadvantage at times. So when I have a big assembly that requires more working time, I use white glue.

gluing & clamping

Q: *When edge gluing, does the glue need to be spread out or can it be left in a bead? And how much pressure should be applied to the clamps?*

A: When gluing and clamping, consistency is the goal.

The glue should be applied so there's a thin, even layer between both pieces of wood. Any interruptions to the glue line will weaken the bond, so it's best to spread it out.

Also, there should be even clamping pressure along the joint line. Just enough so you see small beads squeezing out along the entire joint. (From what I've seen, most woodworkers use too much rather than too little pressure when they're clamping.)

excess glue

Q: *Is it okay to wipe off excess glue with a wet rag?*

A: There's a lot of debate about this question. And to my way of thinking, there's no single right method.

When gluing up a flat panel, I usually let the glue dry (or at least partially dry). Then, I'll scrape off the beads of glue.

But when gluing edging on plywood, there's the risk of chipping the veneer. And scraping glue out of a tight corner joint can be a challenge. So in those cases, I wipe the wood off with a wet rag.

But when wiping, be sure the rag is good and wet, and if there's a lot of glue to wipe up, rinse the rag often. You don't want to smear the glue around and seal the wood. This can cause problems later when you're trying to get a stain or finish to soak in.

fitting a tenon

Q: *Occasionally, I make a tenon that's too small to fit its mortise. Can I repair it?*

A: A tenon should fit a mortise like a hand in a glove. But if the tenon is loose, you can enlarge it with a couple thin pieces of wood or scraps of veneer, see Drawing. I glue the pieces to the cheeks of the tenon. Then I shave or sand the tenon to fit the mortise.

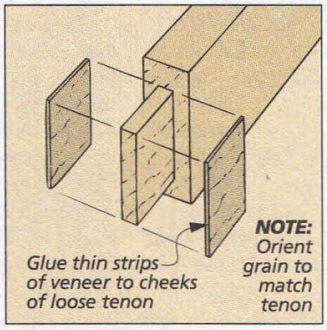

clean edges

Q: *After ripping boards for a panel, do I need to run the edges over a jointer or can I just glue them up?*

A: When gluing up a panel, most woodworkers are careful to get the edges square. But they're not as concerned to get them smooth. In fact, I've even heard some suggest scratching the edges of the wood so there's something for the glue to "hook" onto. But actually, the edges should be as *smooth* as possible.

To understand this, you have to know how yellow glue works. It's easy to think that glue holds two pieces together mechanically by forming little "hooks" that grab the wood. But this isn't the real reason why a glue bond is so strong.

Instead there's a chemical bond between the glue and wood molecules (called "specific adhesion"). A thin layer on one piece of wood sticks to a thin layer on the mating piece. To get an idea of what's going on, put a drop of water between two pieces of glass and try to pull them apart.

For the strongest bond, the edges of the boards should be as smooth as glass. (And there should be an even layer of glue and even clamping pressure.)

So the answer is "yes." If you do have a jointer, use it to get the edges as smooth as possible. If you don't have a jointer, you can use either a hand plane or a table saw. (Just make sure the saw blade is clean and sharp.)

dadoes & grooves

Q: *Is it better to cut dadoes and grooves on the table saw or with a router?*

A: There are a few times when I prefer the router over the table saw. For instance, when I need to cut a stopped dado or a dado with a perfectly flat bottom. Or when routing a dado in a sheet of plywood that's too big to push across the table saw easily.

Routers will cut clean, flat dadoes. But there's a drawback. Dadoes much deeper than ¼" usually have to be routed in two or more passes. The motor just doesn't have enough power to do it in one pass. So with deep dadoes that don't require a perfectly flat bottom, I use the table saw.

A table saw is quicker to set up. It will effortlessly cut a dado or groove in a single pass, and repetitive cuts are much easier to make.

Of course you'll need a good dado blade (or set) to get a clean cut with little chipout. (Cheap blades don't work well when crosscutting.) But if you cut a lot of grooves and dadoes, a good blade is worth it.

wood movement

Q: *I know wood expands and contracts, but how much? And how much movement should I allow for when building a project?*

A: There's just too much to know about wood movement to cover it all with a short answer. But there are a few things to keep in mind.

One is that you can't predict exactly how much wood will expand or contract. Some boards shrink just a little. Other boards of the same type of wood will shrink more.

A lot of factors can affect this: the growing conditions of the tree, whether the wood was kiln-dried or air-dried, and what moisture content the wood was dried to.

But some woods do expand and contract more than others. Hardwoods tend to move more than softwoods, and the "harder" hardwoods, like oak and hard maple, move more than the "softer" hardwoods, like cherry or poplar.

Another thing to remember is that lumber tends to shrink more than it expands. That's because it's usually not completely dry when you first bring it home. (This is especially true of softwoods.)

So to avoid any surprises, I let the wood sit or "acclimate" in the shop for a couple weeks. And when buying hardwood, I try to make sure the moisture content is between 8 and 10%. It may still shrink a little, but most of the movement will be the expansion and contraction that occurs with regular seasonal changes in humidity.

Which brings up another point. The time of year a project is built also affects how the wood will move.

When building during the summer (which is hot and humid here in the Midwest), a joint may fit tight. But in the winter, the same joint can become loose. Dry winter air and forced air furnaces mean there's less moisture in the air, so the wood shrinks. The opposite effect happens if you build a project in the winter.

But one of the most important things to keep in mind is that wood always expands and shrinks most across its width. The length changes very little, if at all.

So you have to be careful how you join two pieces of wood together. If you try to glue the face of one piece perpendicular to the face of another, this "cross grain" construction will result in broken joints or splits in the wood.

To get back to the question, I usually allow for about ⅛" of movement per foot (along the width, not the length). And with frame and panel designs, I'll build the enclosed panels ⅛" narrower (per foot) than they could be — so there's an extra 1/16" on each of the sides to allow for expansion.

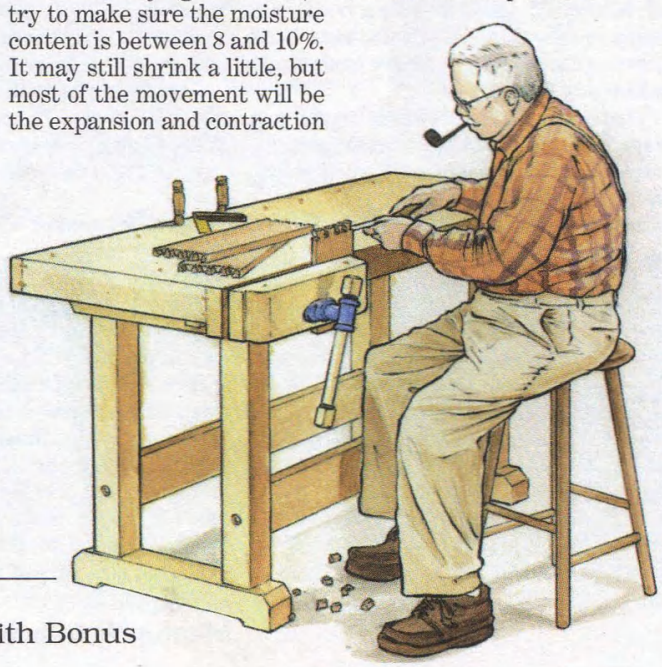

Finishing

Q: *How much sanding do I need to do before finishing?*

A: I know woodworkers who sand to 400-grit. But this really isn't necessary. When the finish is on, you won't be able to see a difference after about 120-grit.

But that's when I'm not staining the wood. Staining tends to bring out the scratches, so for projects that get a coat of stain, I sand to 180 or 220-grit.

Q: *After finishing, I often find spots where the stain didn't take because there was glue that didn't get cleaned off. Can this be prevented?*

A: Glue spots can be a hassle. It doesn't seem to matter how much sanding has been done, they just seem to magically appear when the first coat of stain is applied.

To prevent this, I try to get glue spots (and scratches) to "stand out" so they're easier to see and then remove. To see the spots, I use either light or mineral spirits.

A "raking" light makes glue spots much more visible. Simply set a portable light above and behind the project. Then look across the board for any spots.

The other possibility is to wipe a coat of mineral spirits on the wood. Mineral spirits darkens the wood slightly. But it won't soak into the glue spots, so they're easier to see. Plus, mineral spirits also cleans out the pores and scratches without raising the grain of the wood.

Q: *What finish do you use on toys and eating utensils?*

A: Sometimes no finish is the best finish. But if you want to avoid a "dry" look, then use an oil finish.

Oil finishes penetrate the wood so there's no film that will eventually flake off. But you'll need to apply a fresh coat every so often to maintain the look. (And always allow the finish to dry *completely* before any food touches it.)

There are some oil finishes available from mail order catalogs that are specifically marketed as non-toxic, such as Behlen's Salad Bowl finish. And don't worry, you won't find the real culprits of the past — lead or mercury — in any of the common finishes used today.

Q: *I would like to build some furniture to go with a store-bought dresser. Will I be able to match the stain?*

A: It's not impossible to match a "commercial" finish — but it is difficult. You're really not matching a stain but probably a toner (almost like a thinned-down paint) that was sprayed on with sophisticated equipment at a factory.

Q: *How do I stain pine so there's not a lot of blotching?*

A: To reduce blotching, the thing to do is control the penetration of the stain. There are two ways to do this — with a washcoat or a gel stain.

In the past, I've applied a washcoat before the stain. It partially fills the pores, so there's less penetration.

A washcoat can be either a slow-evaporating solvent, like Minwax's Wood Conditioner, or a thinned-down version of a finish.

Recently though, I've used some gel stains, and they work even better. Being a gel, the stain sits on top of the wood. The penetration isn't quite as deep, and the color is much more consistent.

Q: *When staining, how do you keep the end grain from ending up much darker than the rest of the project?*

A: What I do with end grain that will be stained is to sand it to a finer grit. If I sand everything to 180-grit, I sand the ends to 220 or 280. This way, less stain soaks into the wood.

Another thing you can do when staining end grain is to apply a washcoat before you stain or use a gel stain, see the question about staining pine above.

Q: *Will any finish last outdoors?*

A: For a clear finish, the choice is between an oil finish made for outdoor use (like DAP's Woodlife). Or a spar varnish with ultraviolet inhibitors (like McCloskey's Man O'War Spar Varnish).

An oil finish is easy to apply and re-apply — just wipe it on and off. But you can't build up a protective film, so the oil should be re-applied often.

A varnish will last a lot longer because you can build up a protective film. But unless it's also maintained diligently, it'll need to be stripped before refinishing.

But if durability is what you're after, the best choice for outdoors is paint. A film of paint protects the wood from both sunlight and moisture.

Q: *What makes a finish have a satin or glossy look?*

A: The gloss or sheen of a finish depends on how the light is reflected. A smooth surface tends to reflect light. A rough surface will scatter light.

For a smooth finish that's less glossy, manufacturers add flattening agents to create a "satin" finish. These flattening agents scatter the light, but also tend to hide the grain. So don't use a "satin" finish for every coat. Start with "gloss." Then use satin for the last coat or two.

Q: *What are the pros and cons of water-based finishes?*

A: Water-based finishes do contain less solvents than other finishes. This is better for the environment, but it also means there's no overpowering odor to deal with. Plus, clean-up is a lot easier.

And water-based finishes dry quickly. You can usually apply the next coat in a couple hours. But this can be a disadvantage too. When staining a large area, you may have problems with lap marks.

Another drawback is water-based finishes raise the grain. (But this can be minimized by pre-wetting the wood and lightly sanding the raised grain.)

The last point is a personal bias. I think water-based finishes often look colorless. That's okay for light-colored woods. But when applying a water-based finish to walnut or cherry, the wood doesn't take on the rich, deep color I like. It looks "washed out." (But there is a simple solution. Just stain the wood first. Then apply a clear water-based top coat.)

Q: *When brushing on stains and varnishes, will a foam brush work just as well as a bristle brush?*
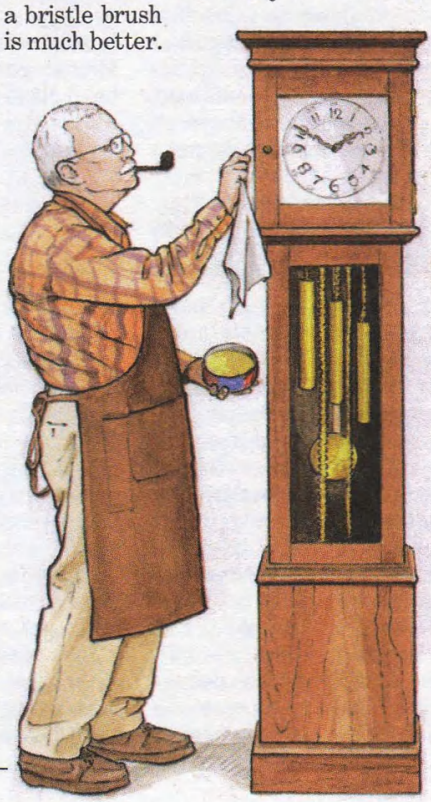
A: Foam brushes are inexpensive and work surprisingly well — on large *flat* surfaces. They don't leave brush marks, but watch for ridges at the edges of each stroke. But when you need to get into crevices, carvings, or turnings, the foam brushes don't work nearly as well. Here a bristle brush is much better.